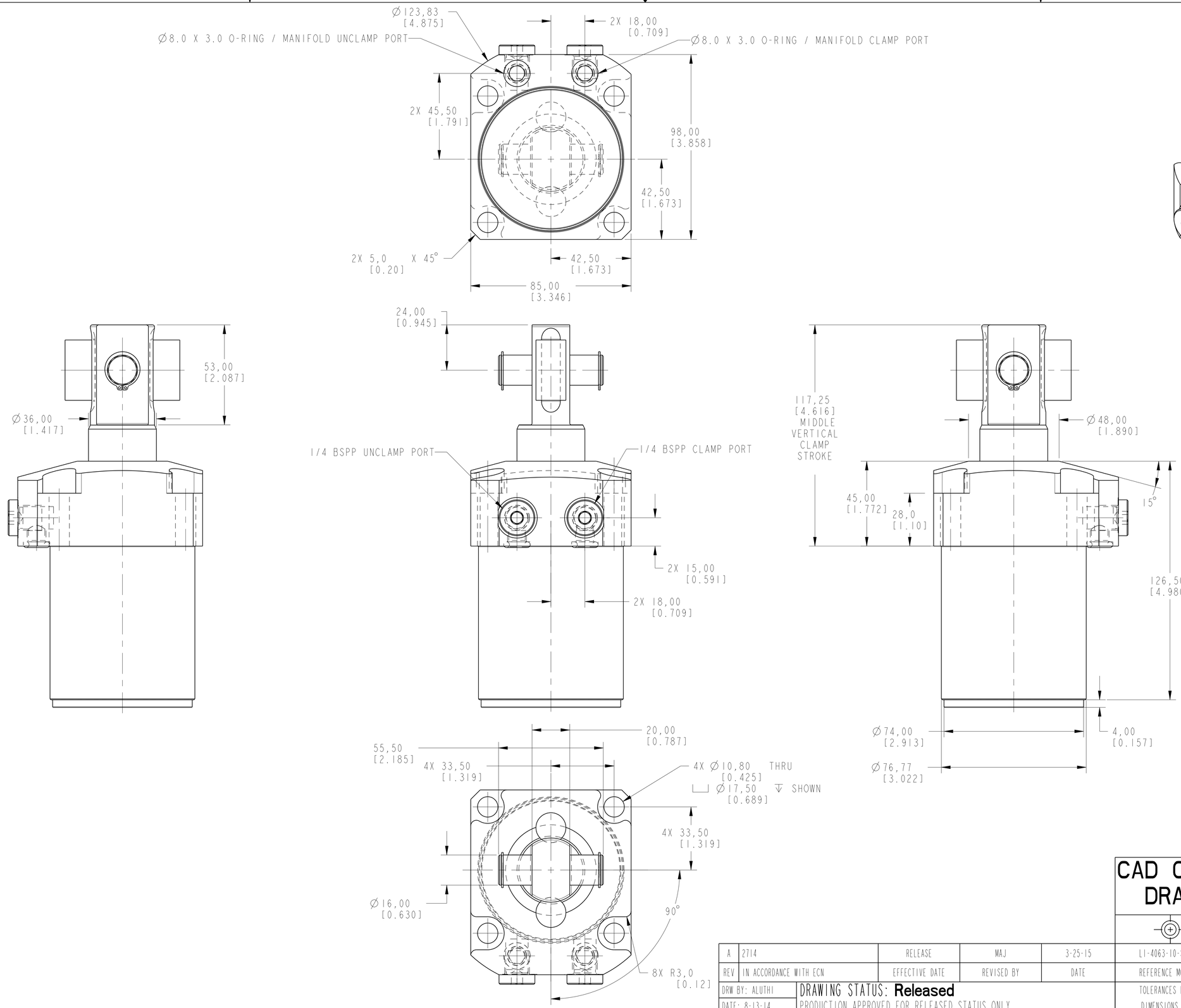

ILCML1406310S90 REV A ECN 2714

CAD CONTROL DRAWING

VEKTEK®

VEKTEK, INC.
1334 E. SIXTH AVE. P.O. BOX 625
EMPORIA, KS. 66801 U.S.A.

A	2714	RELEASE	MAJ	3-25-15	L1-4063-10-S-90	A	SC, TF, 7MPa, 63B, STR, CLEVIS, 90
REV	IN ACCORDANCE WITH ECN	EFFECTIVE DATE	REVISED BY	DATE	REFERENCE MODEL	REF REV	^^^^^^

DRW BY: ALUTHI
DATE: 8-13-14

DRAWING STATUS: **Released**
PRODUCTION APPROVED FOR RELEASED STATUS ONLY

TOLERANCES DO NOT APPLY
DIMENSIONS ARE NOMINAL

SIZE D | ILCML1406310S90 | REV A

SHEET 1 OF 1

FORM FEG036, Rev. B

@Copyright 1986-2022 by Vektek LLC*******