THIS IS A TWO PAGE PARTS LIST.
THIS FIRST PAGE APPLIES TO
MODEL No. 42021001 AT REVISION J AND LATER REVISIONS

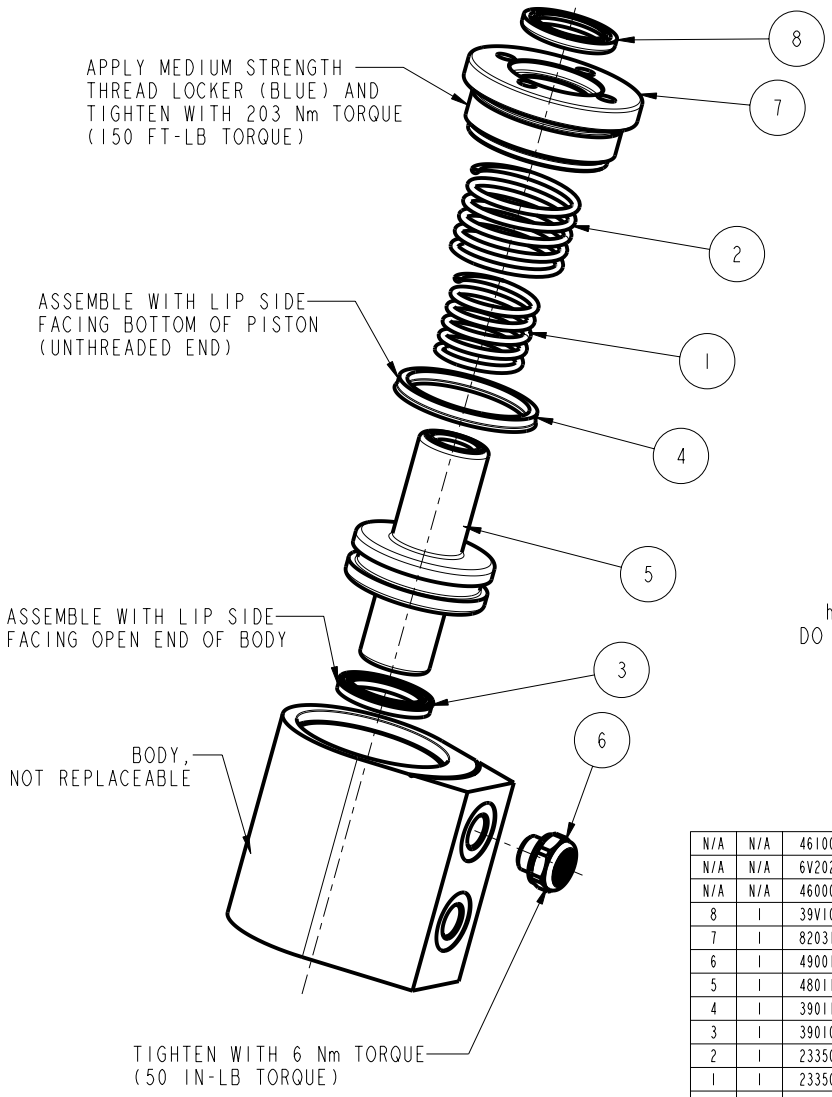

Lubricate seals with clean hydraulic oil prior to assembly.
DO NOT USE SILICONE BASED LUBRICANTS

No.	QTY	PART No.	DESCRIPTION	Std. Seal Kit	FKM Seal Kit	Spring Kit
N/A	N/A	46100047	SPRING KIT			
N/A	N/A	6V202115	SEAL KIT, FKM			
N/A	N/A	46000058	SEAL KIT, STANDARD			
8	1	39V10022	WIPER,PRESS-IN, (3/4)	X	X	
7	1	82031509	GLAND, CYL, HR, 6600&29.7KN, SA			
6	1	49001904	BREATHER, 1/8 BSPP			
5	1	48011503	PISTON, CYL, HR, 29.7 KN			
4	1	39011028	SEAL, BEVEL, 1-5/16 X 3/32 X 1-1/2	X	39012015	
3	1	39010021	SEAL, LL, (3/4 X 1/8 X 1/8 X 1)	X	39V10021	
2	1	23350077	SPRING, COMPRESSION			X
1	1	23350076	SPRING, COMPRESSION			X

PARTS LIST

VEKTEK®

VEKTEK, INC.
1334 E. SIXTH AVE. P.O. BOX 625
EMPORIA, KS. 66801 U.S.A.

REV	IN ACCORDANCE WITH ECN	EFFECTIVE DATE	REVISED BY	DATE
K	2762	RELEASE	JDW	10/17/14

ASSEMBLIES AFFECTED
42021001

PARTS LIST, ASSY, CYL, HR, 29.7 KN, SA

DRW BY: BUSH
DATE: 12/14/94

DRAWING STATUS: Released
PRODUCTION APPROVED FOR RELEASED STATUS ONLY

SIZE A | MPL2030 | REV K

SHEET 1 OF 2

FORM FEG035_PL_ASIZE, REV. B

@ Copyright 1986-2024 by Vektek LLC ****See Vektek.com>Products>Maintenance for special tools

THIS IS A TWO PAGE PARTS LIST.
THIS SECOND PAGE APPLIES TO
MODEL No. 42021001 AT REVISION H AND EARLIER REVISIONS

Lubricate seals with clean
hydraulic oil prior to assembly.
DO NOT USE SILICONE BASED LUBRICANTS

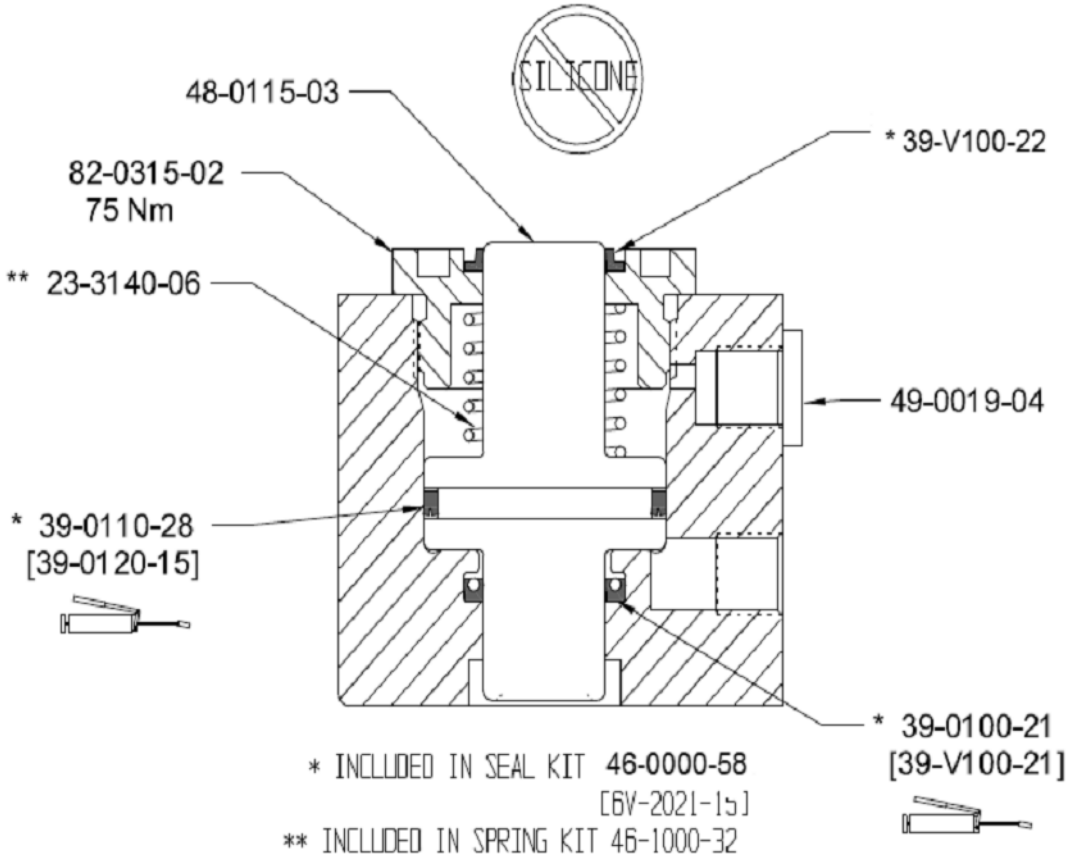

					PARTS LIST	VEKTEK® VEKTEK, INC. 1334 E. SIXTH AVE. P.O. BOX 625 EMPORIA, KS. 66801 U.S.A.
K	2762	RELEASE	JDW	10/17/14	ASSEMBLIES AFFECTED 42021001	PARTS LIST, ASSY, CYL, HR, 29.7 KN, SA
REV	IN ACCORDANCE WITH ECN	EFFECTIVE DATE	REVISED BY	DATE		
DRW BY: BUSH	DRAWING STATUS: Released					SIZE A · MPL2030 · REV K
DATE: 12/14/94	PRODUCTION APPROVED FOR RELEASED STATUS ONLY					

SHEET 2 OF 2

FORM FEG035_PL_ASIZE, REV. B

@ Copyright 1986-2024 by Vektek LLC ****See Vektek.com>Products>Maintenance for special tools