VEKTEK, INC.
1334 E. SIXTH AVE.
P.O. BOX 625
EMPORIA,KS. 66801
U.S.A.

INSTALLATION INSTRUCTIONS

IS2000
REV. D
PAGE 1 OF 1

MANIFOLD MOUNTING OF S/A THREADED CYLINDERS

DRAWN/DATE VANDALSEM 04/06/93

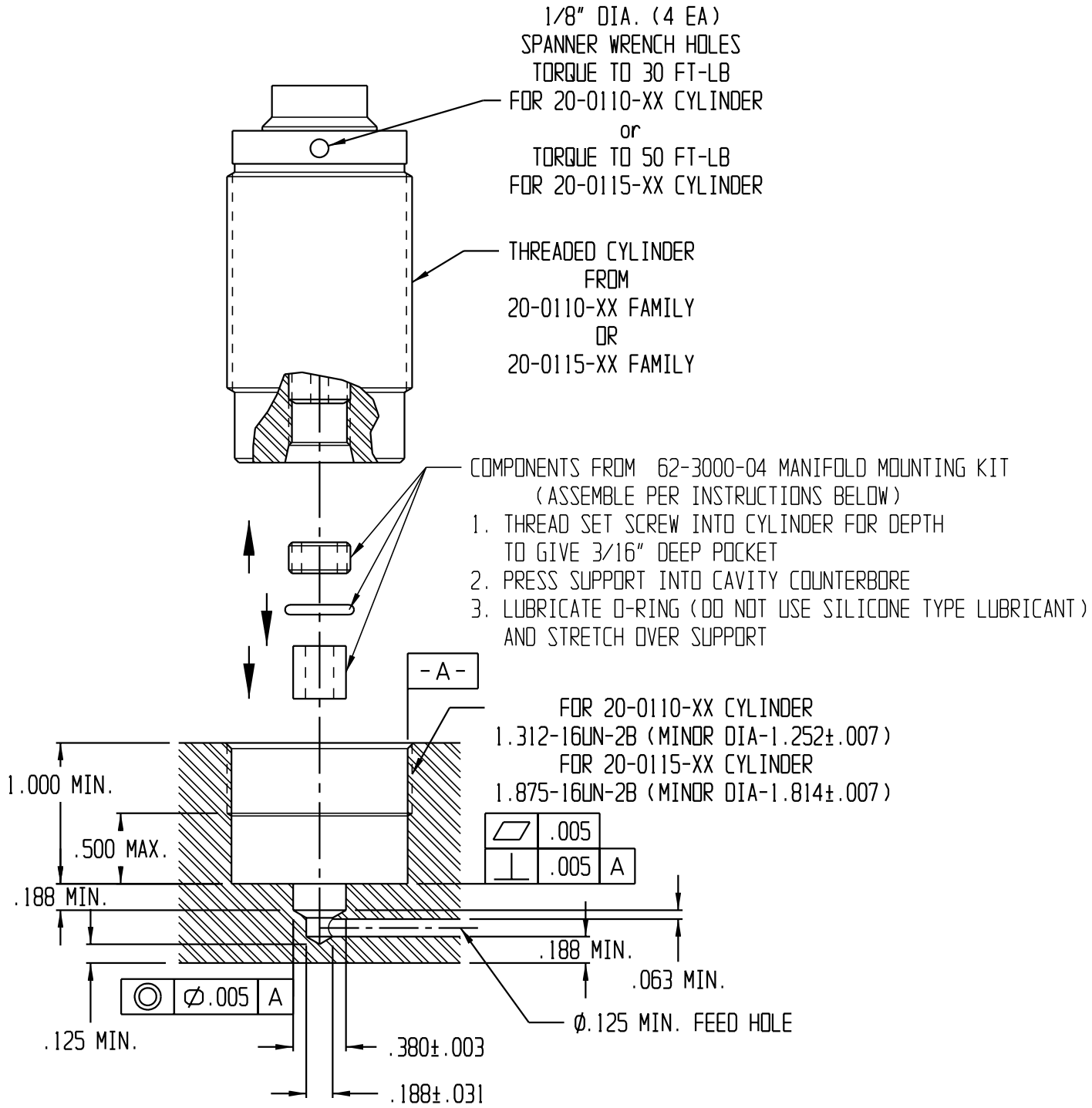

© Copyright 1986-2007 by Vektek, Inc