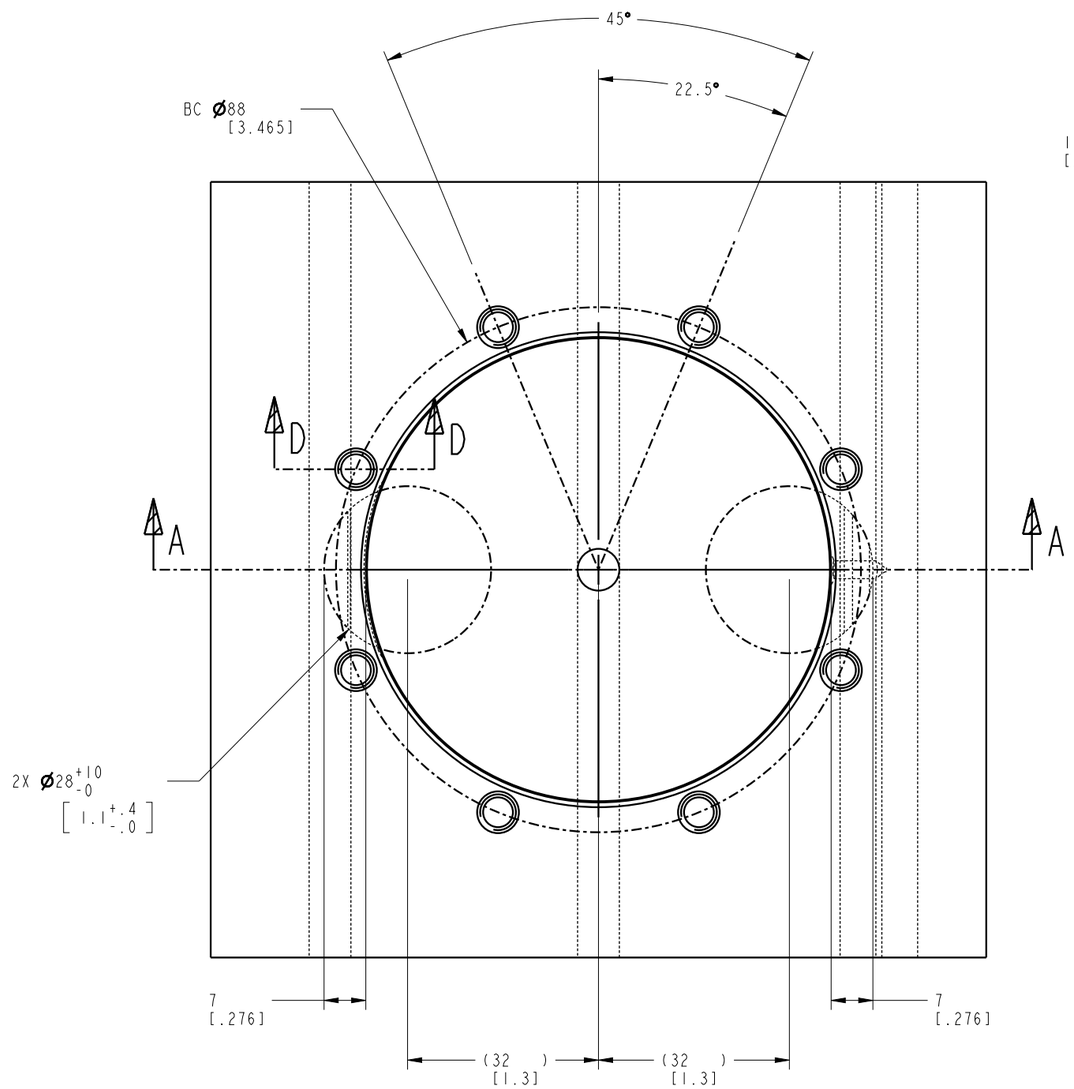

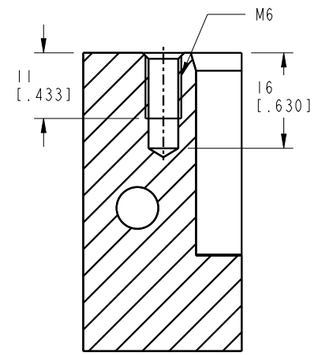

SECTION D-D

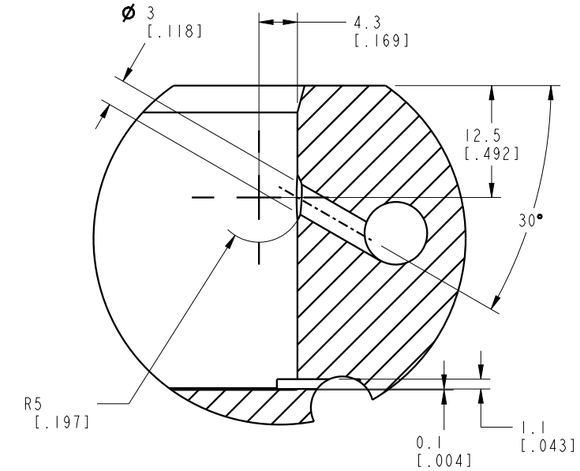

DETAIL Y

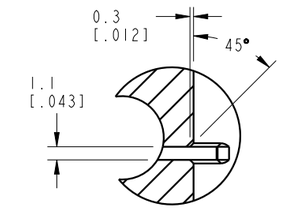

DETAIL Z

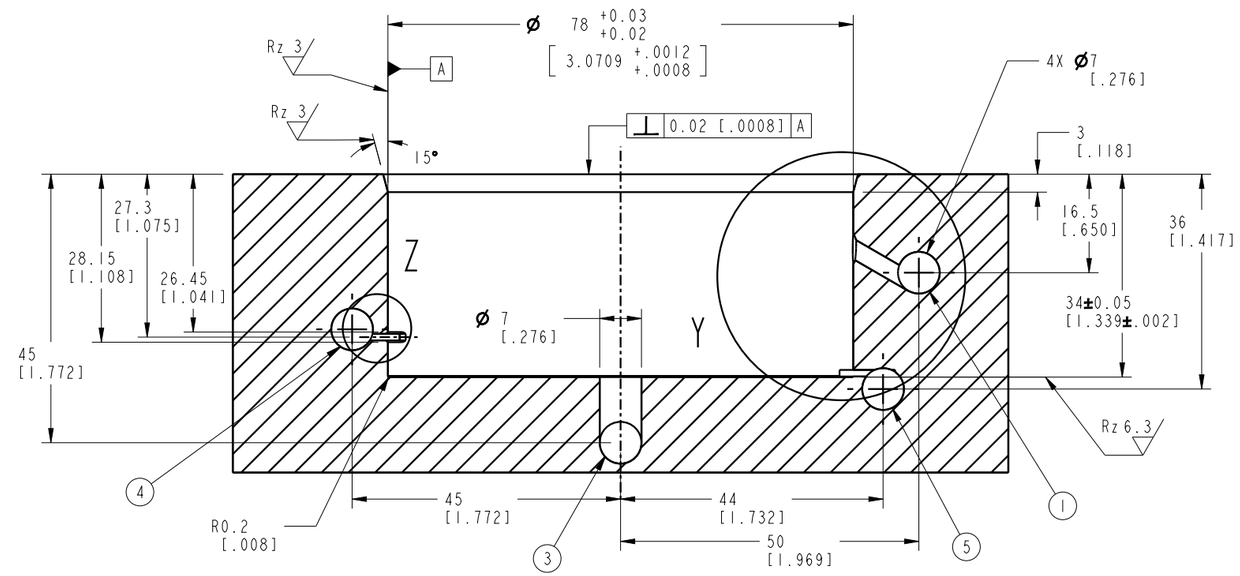

SECTION A-A

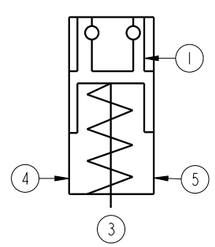

SCHEMATIC

NOTES:
1. HYDR. PRESSURE FOR RELEASE.
3. PNEUM. PRESSURE FOR BLOW OUT AND SUPPORT SENSING.
4. PNEUM. PRESSURE FOR OPEN SENSING.
5. VENT

A	5226	RELEASE	RLK	1/8/24	570262	A	CAVITY INSTRUCTIONS
REV	IN ACCORDANCE WITH ECN	EFFECTIVE DATE	REVISED BY	DATE	REFERENCE MODEL	REF REV	ZPS, HYD, KH20, SENSING
DRW BY: RLK	DRAWING STATUS: Released				TOLERENCES DO NOT APPLY	UNITS	SIZE B / ISM5709 / REV A
DATE: 1/8/24	PRODUCTION APPROVED FOR RELEASED STATUS ONLY				DIMENSIONS ARE NOMINAL	mm [inch]	

CAD CONTROL DRAWING

VEKTEK®
VEKTEK, INC.
1334 E. SIXTH AVE. P.O. BOX 625
EMPORIA, KS. 66801 U.S.A.

SHEET 1 OF 1

FORM FEG036, Rev. C

@Copyright 1986-2024 by Vektek LLC******* *****

****