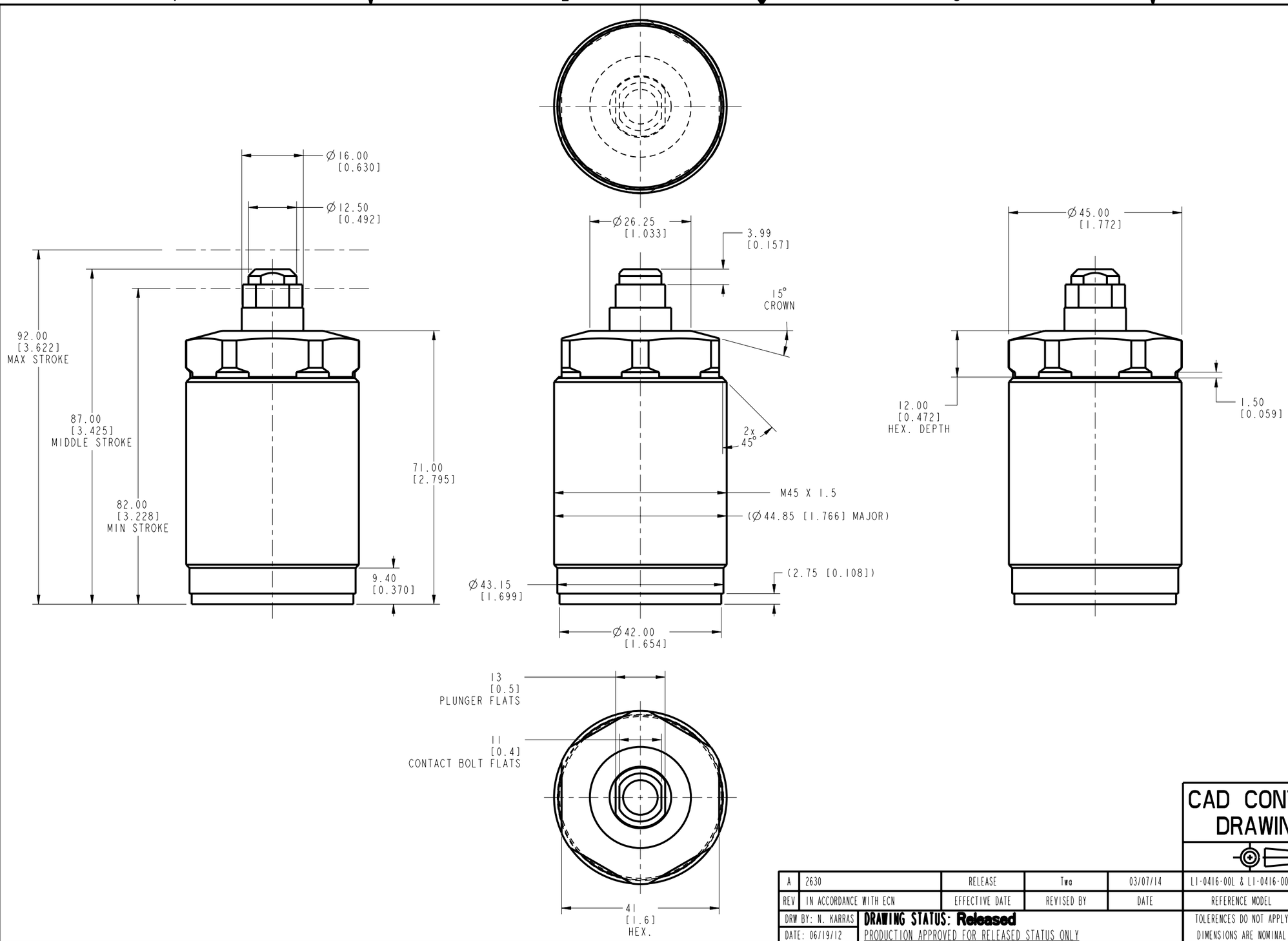

ILCML1041600H REV A ECN 2630

CAD CONTROL DRAWING

VEKTEK®
VEKTEK, INC.
1334 E. SIXTH AVE. P.O. BOX 625
EMPORIA, KS. 66801 U.S.A.

A	2630	RELEASE	Twa	03/07/14	L1-0416-00L & L1-0416-00H	A	ASSY, WS, 7MPa, CM, FA, 10kN
REV	IN ACCORDANCE WITH ECN	EFFECTIVE DATE	REVISED BY	DATE	REFERENCE MODEL	REF REV	`` `` ``
DRW BY: N. KARRAS	DRAWING STATUS: Released				TOLERENCES DO NOT APPLY	UNITS	SIZE B — ILCML1041600H — REV A
DATE: 06/19/12	PRODUCTION APPROVED FOR RELEASED STATUS ONLY				DIMENSIONS ARE NOMINAL	mm [inch]	

SHEET 1 OF 1

FORM FEG036, Rev. C

@Copyright 1986-2026 by Vektek LLC******* *****

****