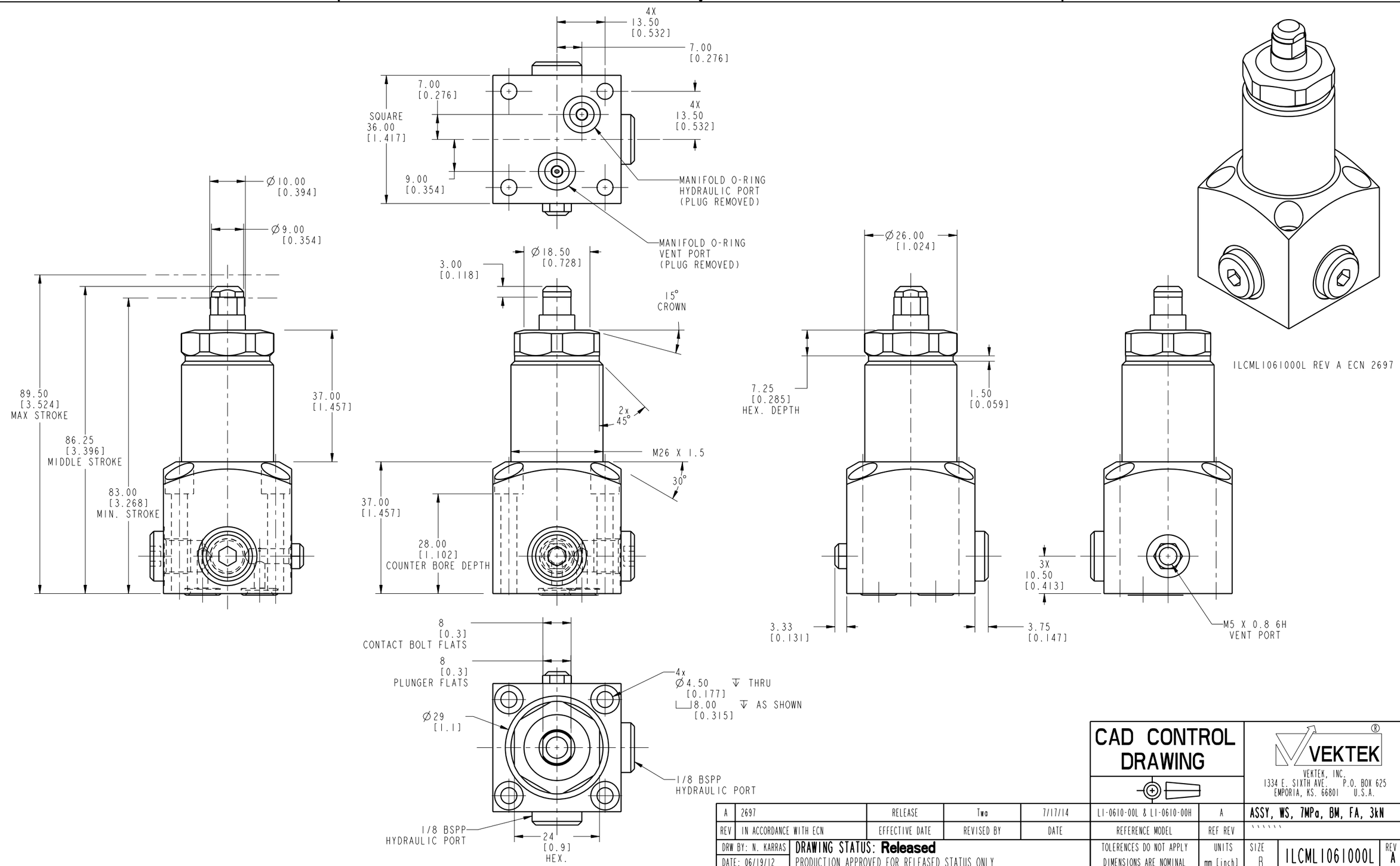

A	2697	RELEASE	Twa	7/17/14	L1-0610-00L & L1-0610-00H	A	ASSY, WS, 7MPa, BM, FA, 3kN
REV	IN ACCORDANCE WITH ECN	EFFECTIVE DATE	REVISED BY	DATE	REFERENCE MODEL	REF REV	`` `` ``
DRW BY: N. KARRAS	DRAWING STATUS: **Released**				TOLERENCES DO NOT APPLY	UNITS	SIZE B — ILCML1061000L — REV A
DATE: 06/19/12	PRODUCTION APPROVED FOR RELEASED STATUS ONLY				DIMENSIONS ARE NOMINAL	mm [inch]	

CAD CONTROL DRAWING

VEKTEK®
VEKTEK, INC.
1334 E. SIXTH AVE. P.O. BOX 625
EMPORIA, KS. 66801 U.S.A.

SHEET 1 OF 1

FORM FEG036, Rev. C

@Copyright 1986-2026 by Vektek LLC******* *****

****