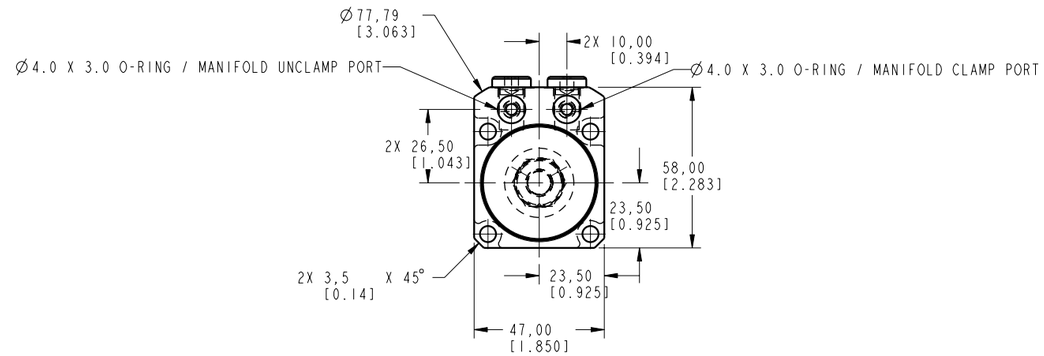

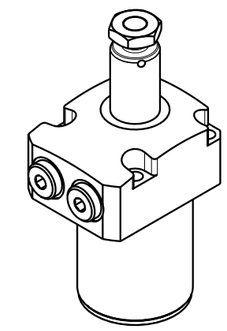

ILCML1403200L REV A ECN 2549

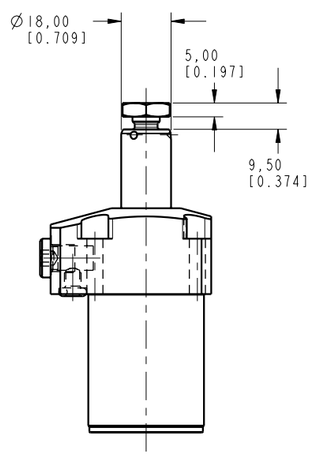

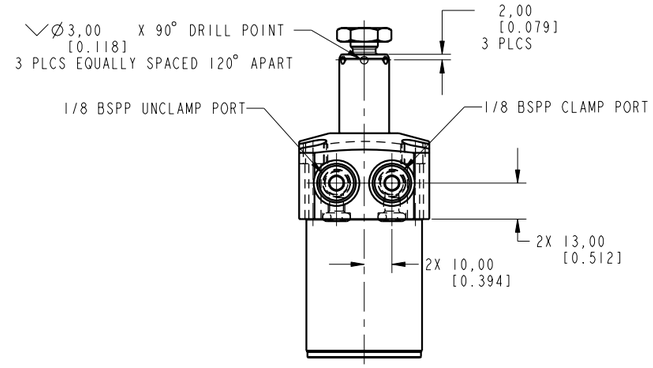

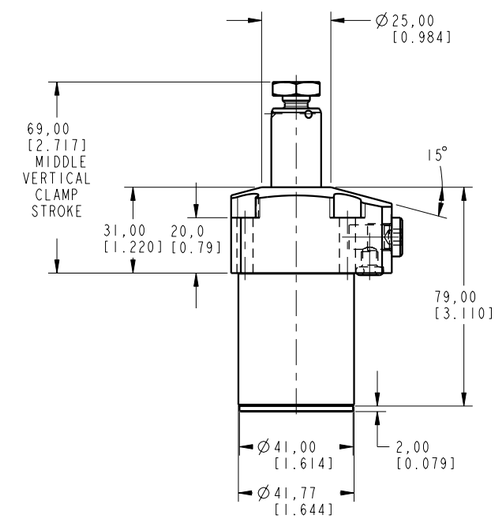

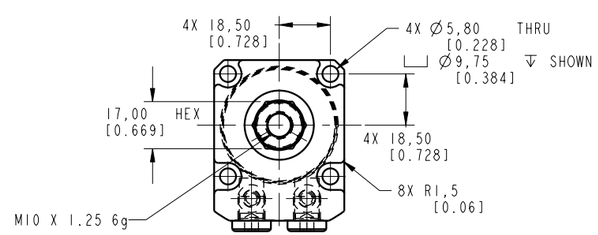

CAD CONTROL DRAWING

VEKTEK
VEKTEK, INC.
1334 E. SIXTH AVE. P.O. BOX 625
EMPORIA, KS. 66801 U.S.A.

A	2549	RELEASE	QMITCHELL	6-12-13	L1403200L	A	SC, TF, 7MPa, 32B, LH
REV	IN ACCORDANCE WITH ECN	EFFECTIVE DATE	REVISED BY	DATE	REFERENCE MODEL	REF REV	``
DRW BY: ALUTHI	DRAWING STATUS: ECN				TOLERANCES DO NOT APPLY	UNITS	SIZE D / ILCML1403200L / REV A
DATE: 12-29-11	PRODUCTION APPROVED FOR RELEASED STATUS ONLY				DIMENSIONS ARE NOMINAL	mm [inch]	

SHEET 1 OF 1

FORM FEG036, Rev. B

@Copyright 1986-2026 by Vektek LLC******* *****

****