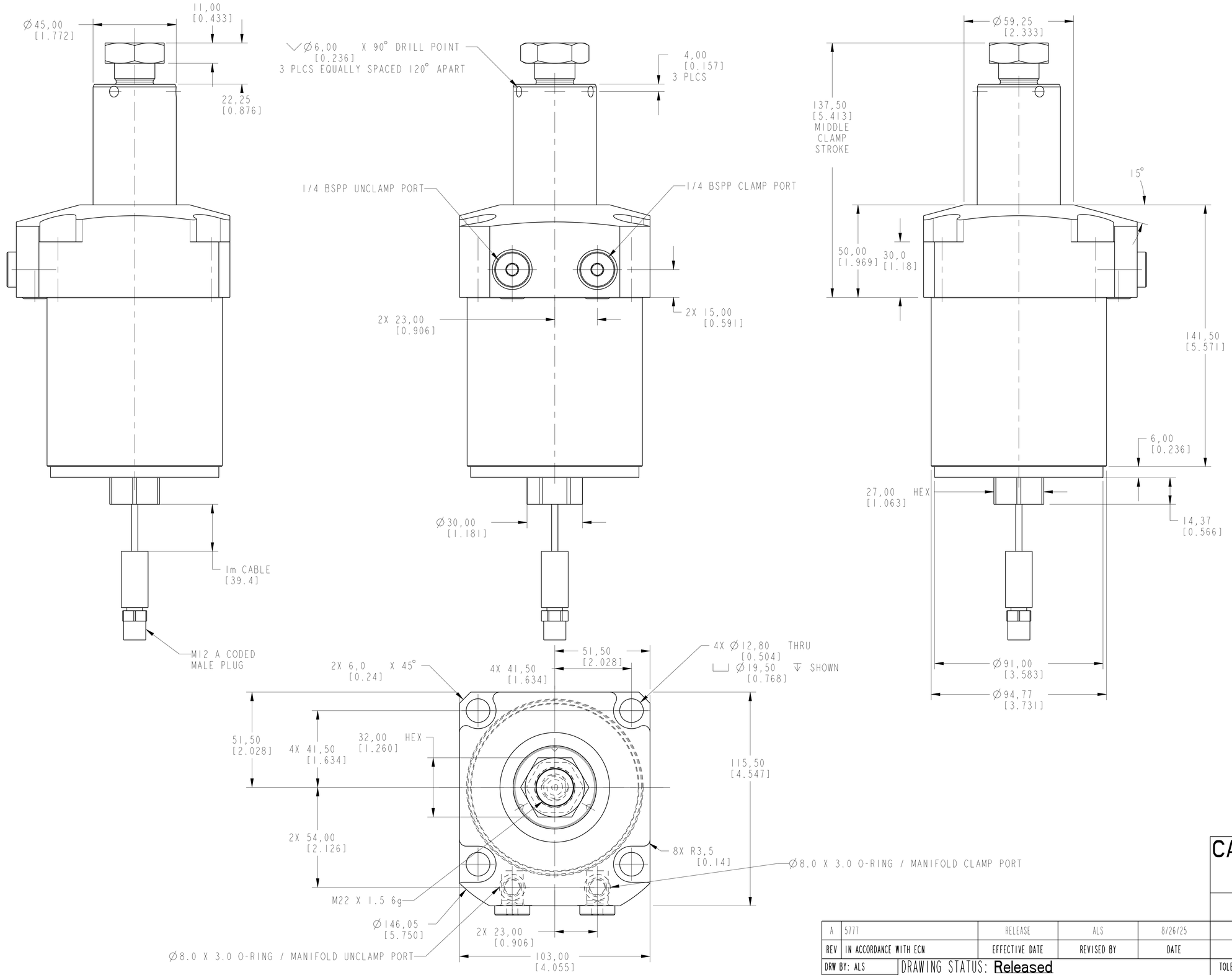

CAD CONTROL DRAWING

VEKTEK®
VEKTEK, INC.
1334 E. SIXTH AVE. P.O. BOX 625
EMPORIA, KS. 66801 U.S.A.

REV	IN ACCORDANCE WITH ECN	EFFECTIVE DATE	REVISED BY	DATE	REFERENCE MODEL	REF REV	
A	5777	RELEASE	ALS	8/26/25	L1408000LUS	A	SC, TF, 7MPa, 80B, LH, US

DRW BY: ALS	DRAWING STATUS: Released	TOLERANCES DO NOT APPLY	UNITS	SIZE
DATE: 7/30/25	PRODUCTION APPROVED FOR RELEASED STATUS ONLY	DIMENSIONS ARE NOMINAL	mm [inch]	D

ILCML1408000LUS REV A

SHEET 1 OF 1

FORM FEG036, Rev. C

@Copyright 1986-2026 by Vektek LLC******* *****