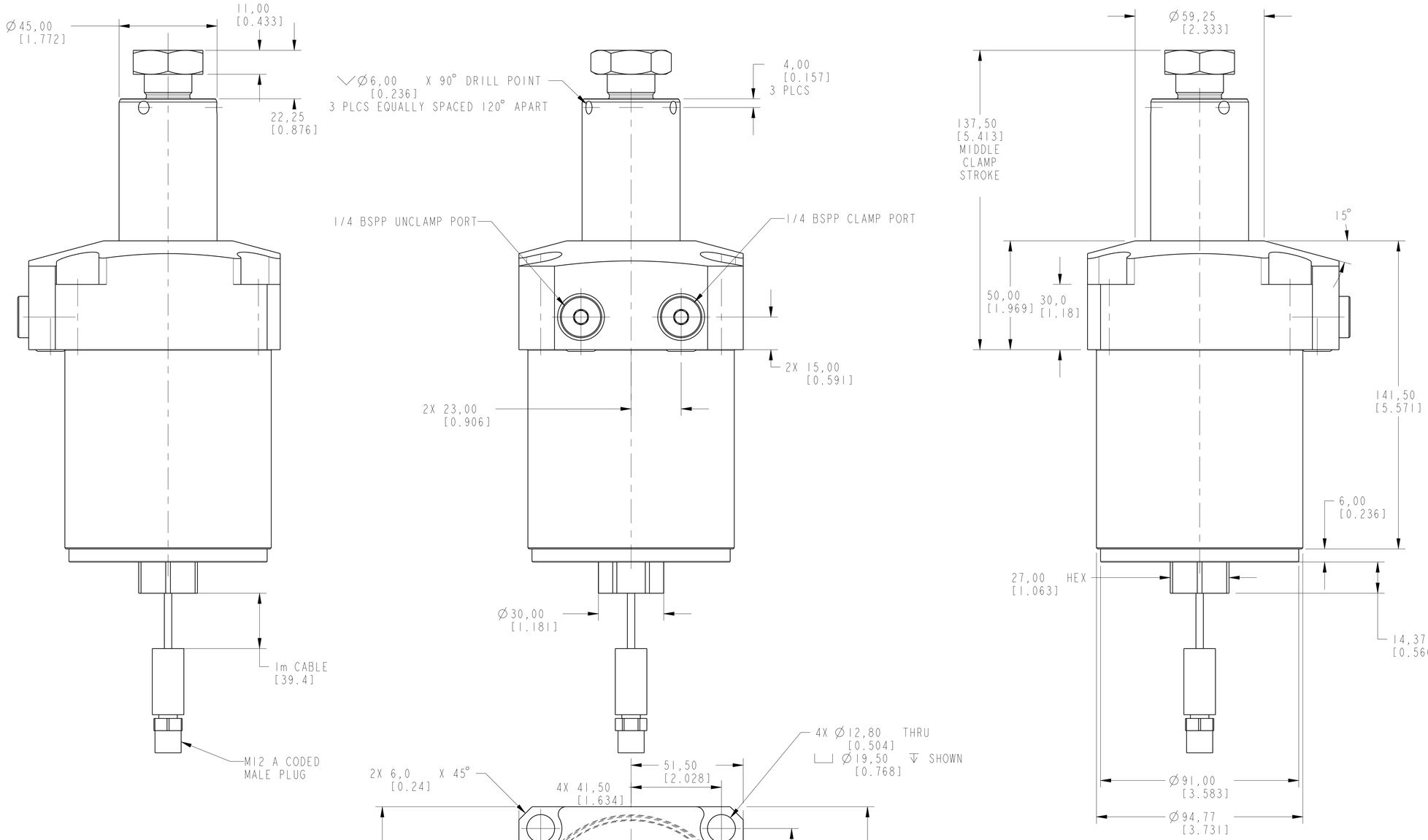

ILCML1408000RUS REV A ECN 5777

CAD CONTROL DRAWING

VEKTEK®
VEKTEK, INC.
1334 E. SIXTH AVE. P.O. BOX 625
EMPORIA, KS. 66801 U.S.A.

REV	IN ACCORDANCE WITH ECN	EFFECTIVE DATE	REVISED BY	DATE	REFERENCE MODEL	REF REV	
A	5777	RELEASE	ALS	8/26/25	L1408000RUS	A	SC, TF, 7MPa, 80B, RH, US

DRW BY: ALS
DATE: 7/30/25
DRAWING STATUS: Released
PRODUCTION APPROVED FOR RELEASED STATUS ONLY
TOLERANCES DO NOT APPLY
DIMENSIONS ARE NOMINAL
UNITS mm [inch]
SIZE D
ILCML1408000RUS
REV A
SHEET 1 OF 1

@Copyright 1986-2026 by Vektek LLC******* *****

FORM FEG036, Rev. C