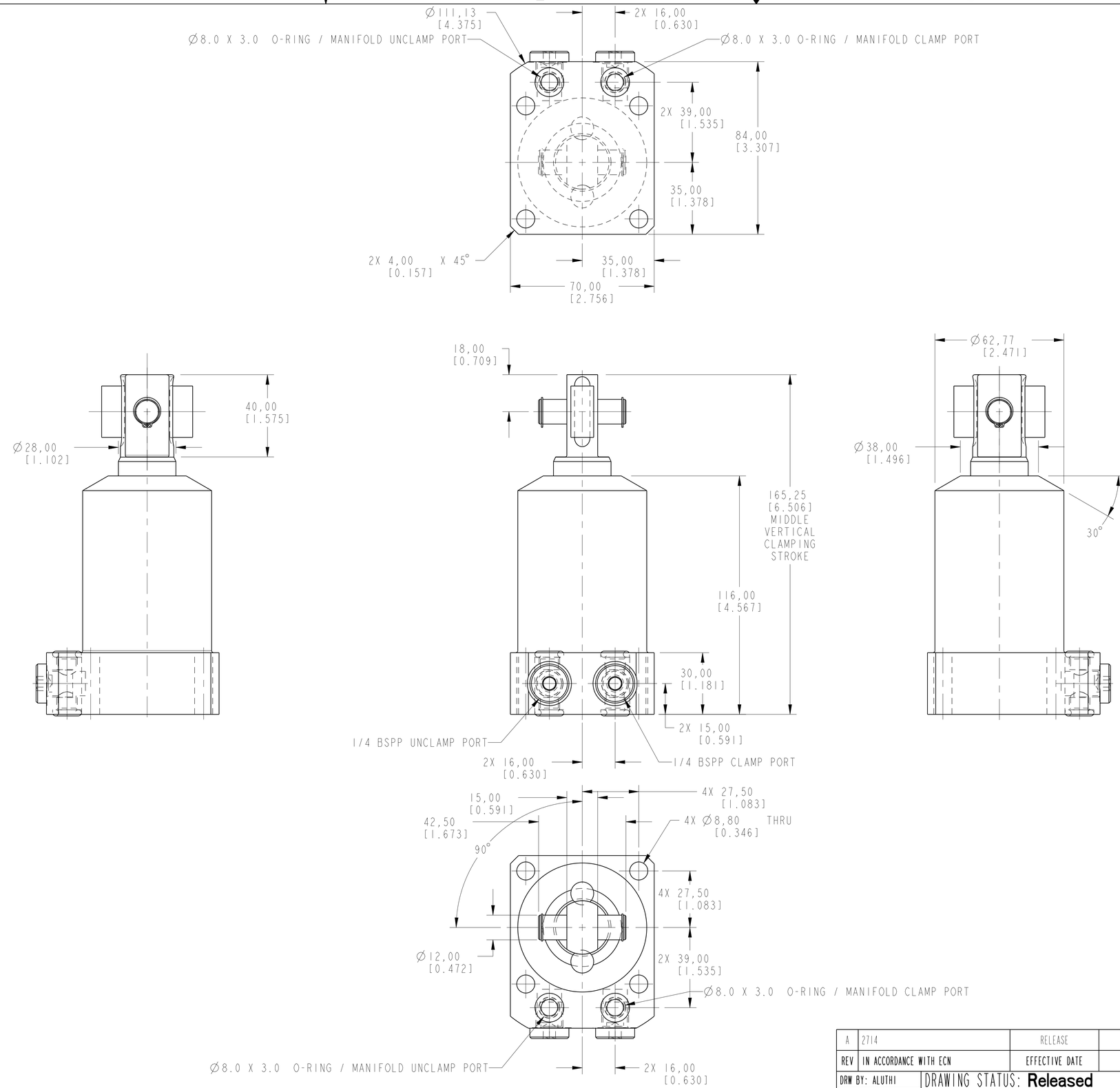

ILCML1415010R90 REV A ECN 2714

CAD CONTROL DRAWING

VEKTEK®

VEKTEK, INC.
1334 E. SIXTH AVE. P.O. BOX 625
EMPORIA, KS. 66801 U.S.A.

REV	IN ACCORDANCE WITH ECN	EFFECTIVE DATE	REVISED BY	DATE	REFERENCE MODEL	REF REV
A	2714	RELEASE	MAJ	3-25-15	L1-4150-10-R-90	A

`` `` `` `` `` ``

DRW BY: ALUTHI
DATE: 8-13-14

DRAWING STATUS: **Released**
PRODUCTION APPROVED FOR RELEASED STATUS ONLY

TOLERANCES DO NOT APPLY
DIMENSIONS ARE NOMINAL

UNITS: mm [inch]

SIZE: D

SC, BF, 7MPa, 50B, RH, CLEVIS, 90

ILCML1415010R90 REV A

SHEET 1 OF 1

FORM FEG036, Rev. C

@Copyright 1986-2026 by Vektek LLC******* *****