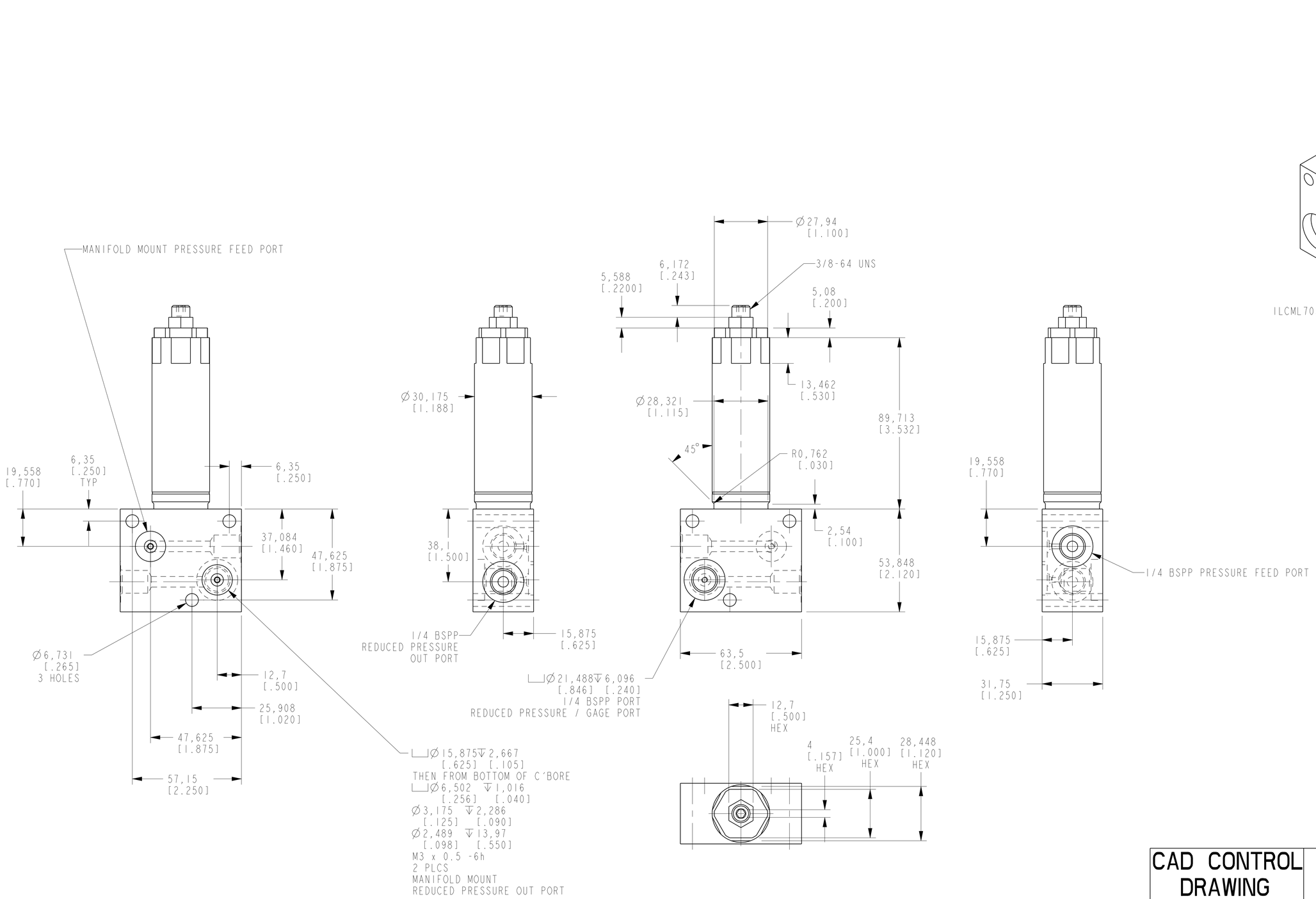

CAD CONTROL DRAWING

VEKTEK

VEKTEK, INC.
1334 E. SIXTH AVE. P.O. BOX 625
EMPORIA, KS. 66801 U.S.A.

B	4534	RELEASE	ALS	10/5/21	L7051200	C	PRV, LP, MANIFOLD, METRIC
REV	IN ACCORDANCE WITH ECN	EFFECTIVE DATE	REVISED BY	DATE	REFERENCE MODEL	REF REV	
DRW BY: DKC	DRAWING STATUS: **Released**				TOLERANCES DO NOT APPLY	UNITS	SIZE D — ILCML7051200 — REV B
DATE: 11-25-12	PRODUCTION APPROVED FOR RELEASED STATUS ONLY				DIMENSIONS ARE NOMINAL	mm [inch]	

SHEET 1 OF 1

@Copyright 1986-2026 by Vektek LLC******* *****

FORM FEG036, Rev. C