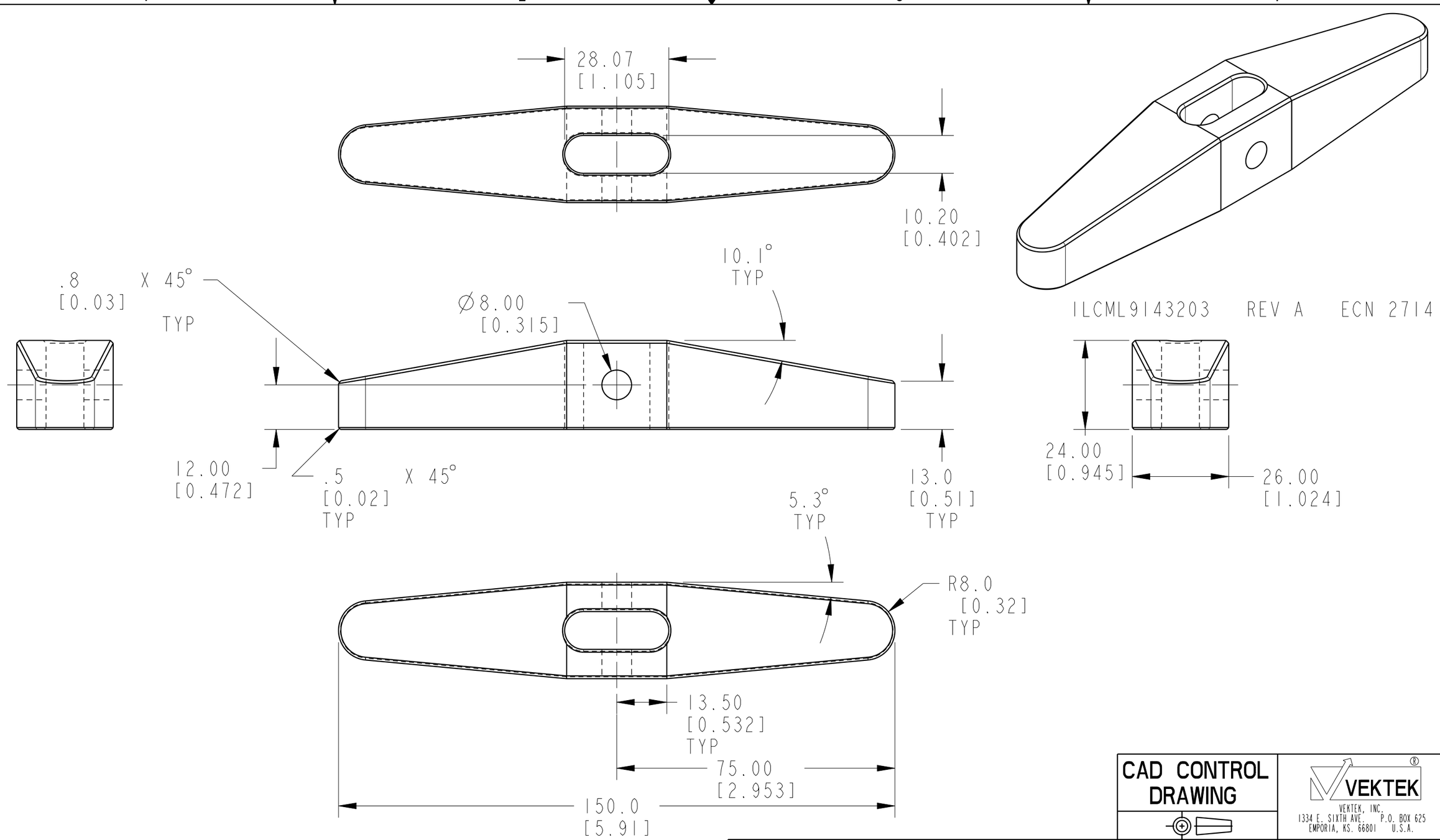

A	2714	RELEASE	MAJ	3-25-15	L9-1432-03	01	ARM, SC, 7MPa, 32B, ROCKER
REV	IN ACCORDANCE WITH ECN	EFFECTIVE DATE	REVISED BY	DATE	REFERENCE MODEL	REF REV	`` `` ``
DRW BY: ALUTHI	DRAWING STATUS: **Released**				TOLERENCES DO NOT APPLY	UNITS	SIZE B — ILCML9143203 — REV A
DATE: 7-7-14	PRODUCTION APPROVED FOR RELEASED STATUS ONLY				DIMENSIONS ARE NOMINAL	mm [inch]	

CAD CONTROL DRAWING

VEKTEK®
VEKTEK, INC.
1334 E. SIXTH AVE. P.O. BOX 625
EMPORIA, KS. 66801 U.S.A.

SHEET 1 OF 1

FORM FEG036, Rev. C

@Copyright 1986-2026 by Vektek LLC******* ***** **********