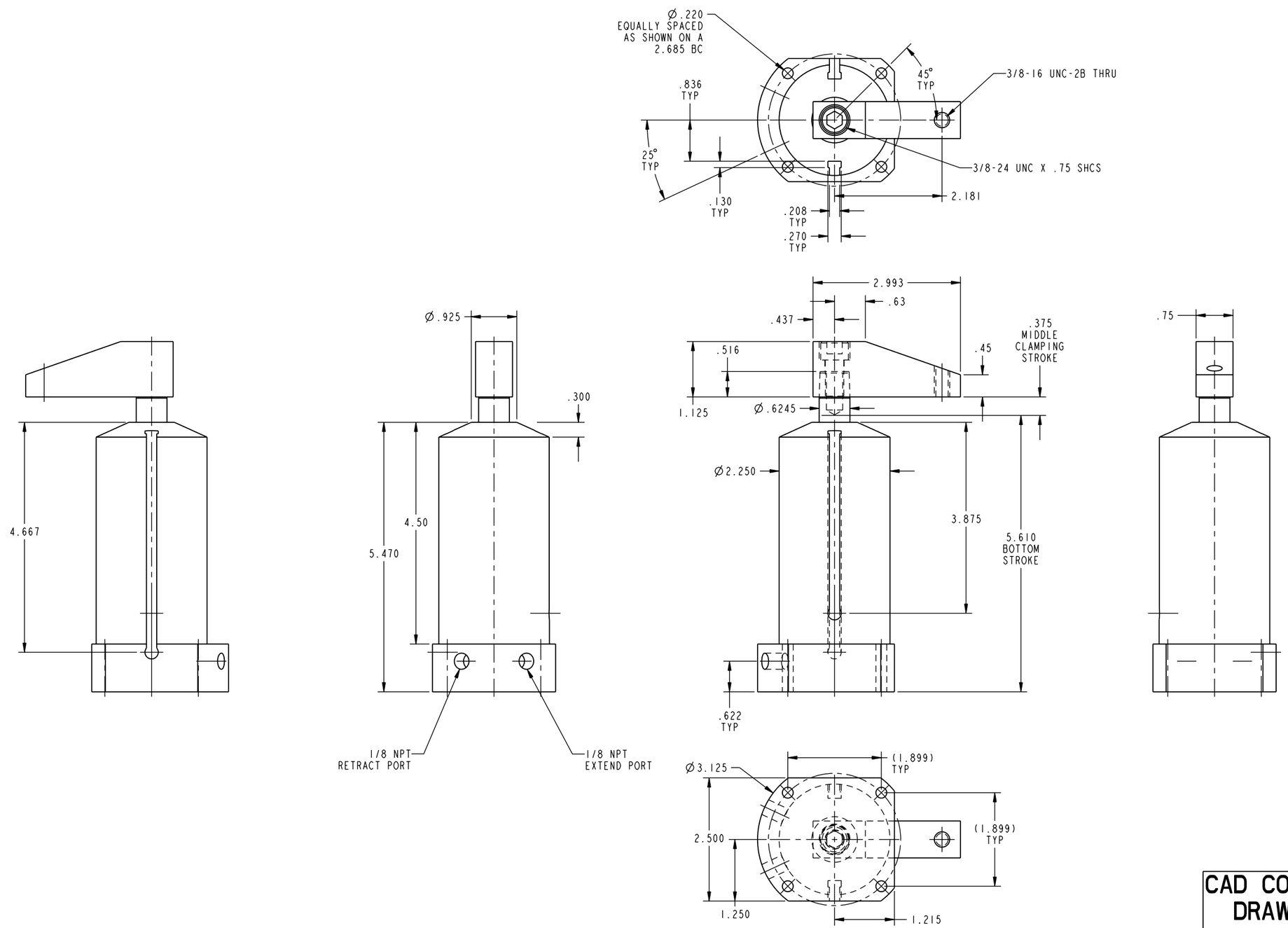

ILCP1514700 REV C ECN 2228

CAD CONTROL DRAWING

VEKTEK

VEKTEK, INC.
1334 E. SIXTH AVE. P.O. BOX 625
EMPORIA, KS. 66801 U.S.A.

C	2228	RELEASE	JDW	9-15-10	P1514700	F	ASSY,SC,PNEU,BF,1 1/2,LH
REV	IN ACCORDANCE WITH ECN	EFFECTIVE DATE	REVISED BY	DATE	REFERENCE MODEL	REF REV	`` `` `` `` ``

DRW BY: K. ROEMER
DATE: 10-06-06

DRAWING STATUS: **Released**
PRODUCTION APPROVED FOR RELEASED STATUS ONLY

TOLERANCES DO NOT APPLY
DIMENSIONS ARE NOMINAL

SIZE D | ILCP1514700 | REV C

SHEET 1 OF 1

FORM FEG036, Rev. A

@Copyright 1986-2026 by Vektek LLC******* *****

****