ILCP1662212 REV A ECN 1714

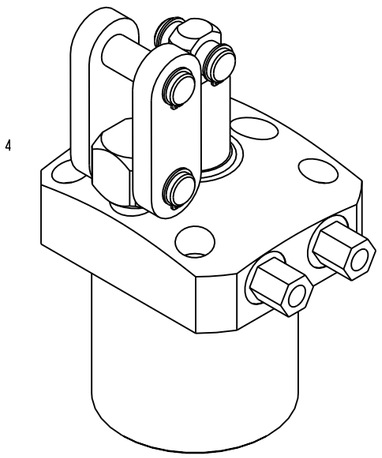

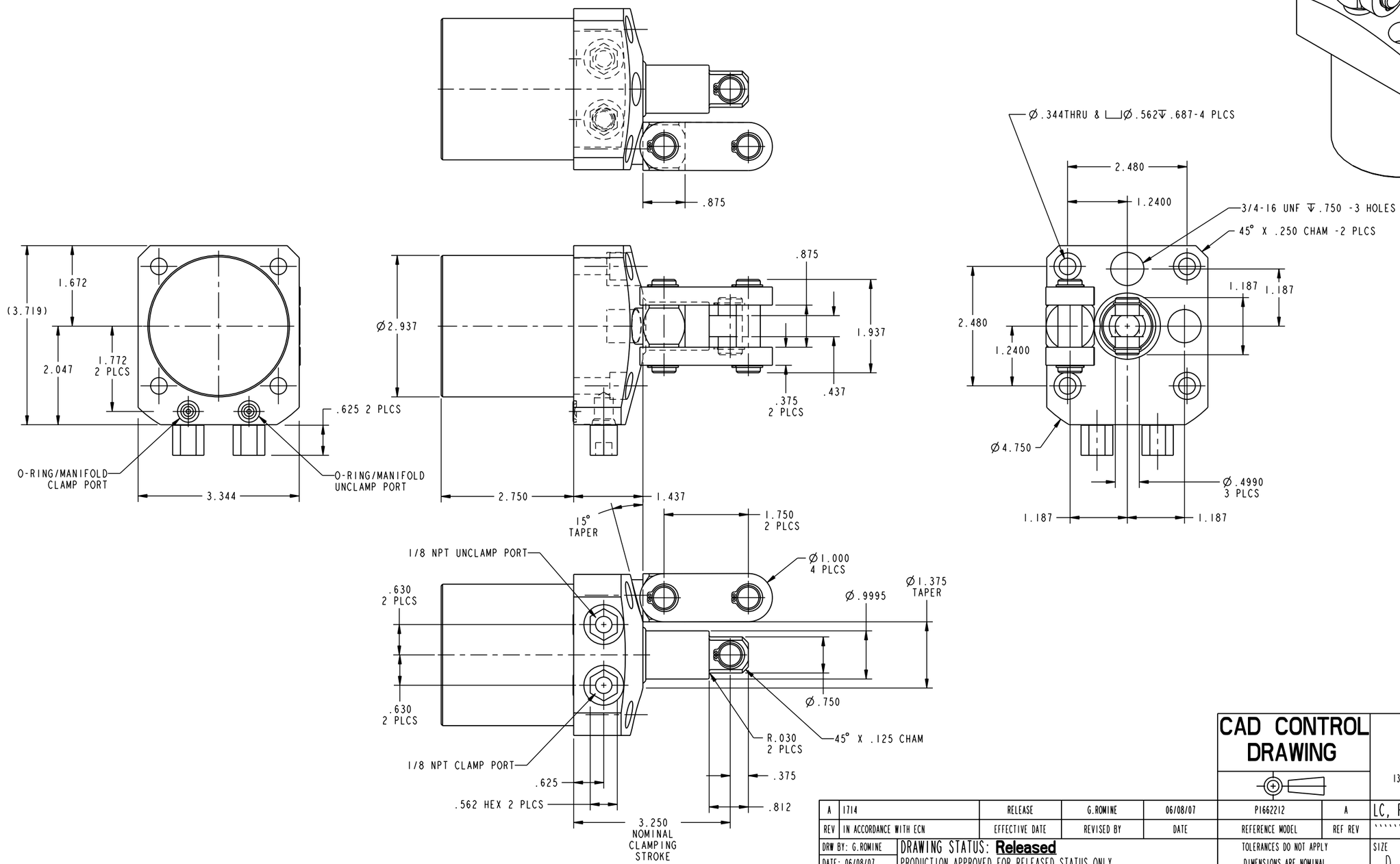

CAD CONTROL DRAWING

VEKTEK
VEKTEK, INC.
1334 E. SIXTH AVE. P.O. BOX 625
EMPORIA, KS. 66801 U.S.A.

A	1714	RELEASE	G.ROMINE	06/08/07	P1662212	A	LC, PNEU, 2 1/8, DA, LH
REV	IN ACCORDANCE WITH ECN	EFFECTIVE DATE	REVISED BY	DATE	REFERENCE MODEL	REF REV	`` `` ``
DRW BY: G.ROMINE	DRAWING STATUS: **Released**				TOLERANCES DO NOT APPLY	SIZE D	ILCP1662212 REV A
DATE: 06/08/07	PRODUCTION APPROVED FOR RELEASED STATUS ONLY				DIMENSIONS ARE NOMINAL		

SHEET 1 OF 1

FORM FEG036, Rev. A

@Copyright 1986-2026 by Vektek LLC******* *****

****