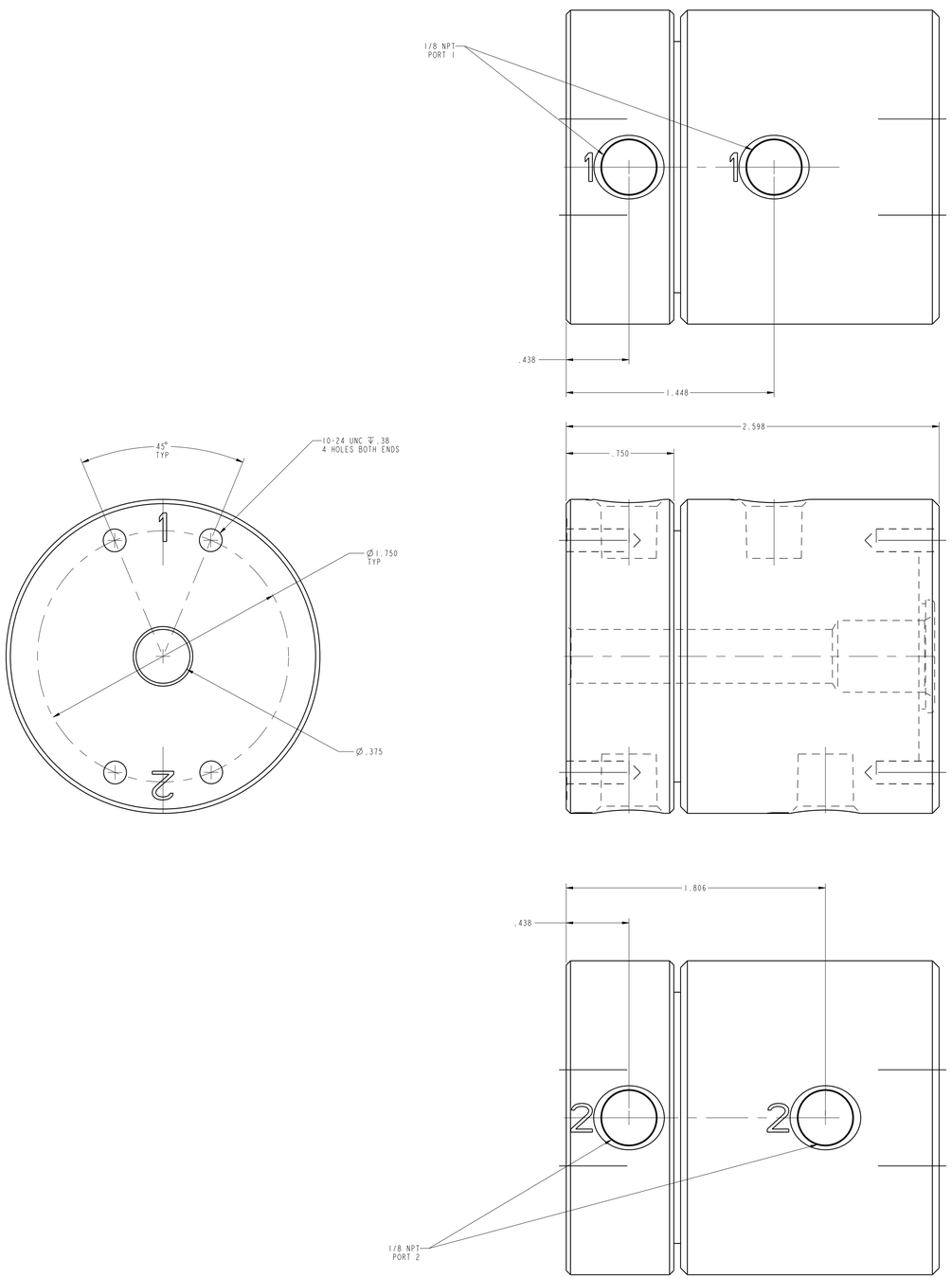

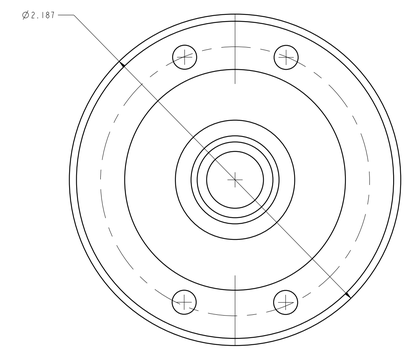

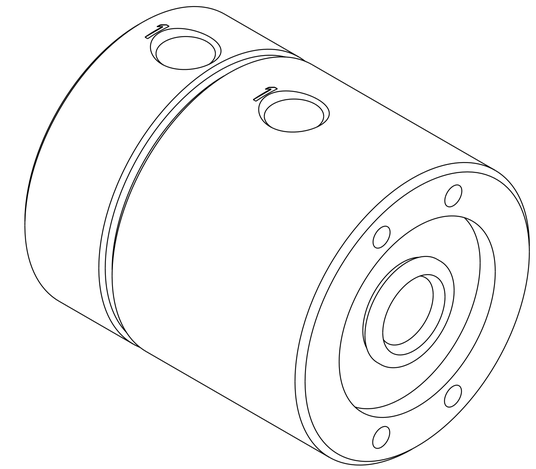

ILCP3224201 REV B ECN5033

CAD CONTROL DRAWING

VEKTEK®
VEKTEK, INC.
1334 E. SIXTH AVE. P.O. BOX 625
EMPORIA, KS. 66801 U.S.A.

B	5033	RELEASE	JDW	02/17/23	P3224201	C	RU,2 PASSAGE
REV	IN ACCORDANCE WITH ECN	EFFECTIVE DATE	REVISED BY	DATE	REFERENCE MODEL	REF REV	
DRW BY: K. ROEMER	DRAWING STATUS: Released				TOLERANCES DO NOT APPLY	SIZE	REV
DATE: 10-17-06	PRODUCTION APPROVED FOR RELEASED STATUS ONLY				DIMENSIONS ARE NOMINAL	D	ILCP3224201 B

SHEET 1 OF 1

@Copyright 1986-2026 by Vektek LLC******* *****

FORM FEG036, Rev. B