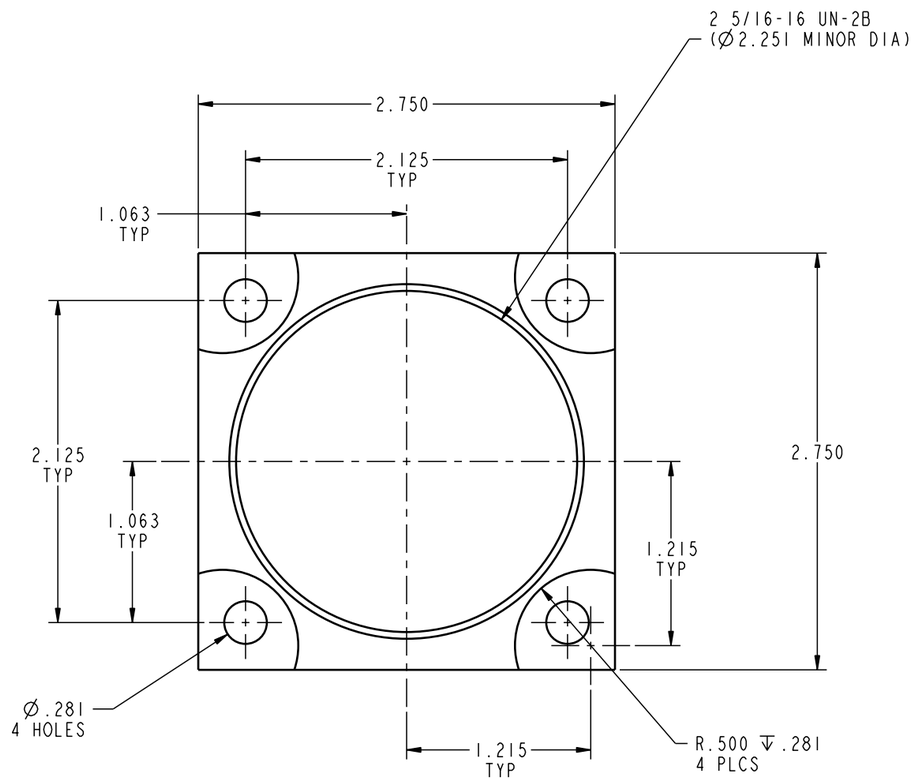

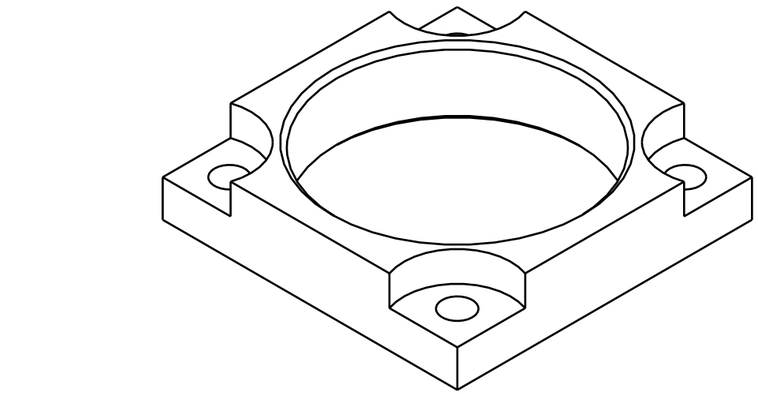

ILCP6401230 REV A ECN 1600

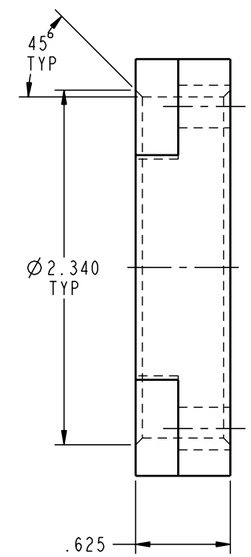

A	1600	RELEASE	K. ROEMER	11-16-06	P6401230	A	FLANGE, MOUNTING, 2 5/16-16
REV	IN ACCORDANCE WITH ECN	EFFECTIVE DATE	REVISED BY	DATE	REFERENCE MODEL	REF REV	```
DRW BY: K. ROEMER	DRAWING STATUS: **Released**				TOLERENCES DO NOT APPLY		SIZE B — ILCP6401230 — REV A
DATE: 11-160-6	PRODUCTION APPROVED FOR RELEASED STATUS ONLY				DIMENSIONS ARE NOMINAL		

CAD CONTROL DRAWING

VEKTEK

VEKTEK, INC.
1334 E. SIXTH AVE. P.O. BOX 625
EMPORIA, KS. 66801 U.S.A.

SHEET 1 OF 1

FORM FEG036, Rev. A

@Copyright 1986-2026 by Vektek LLC******* *****

****