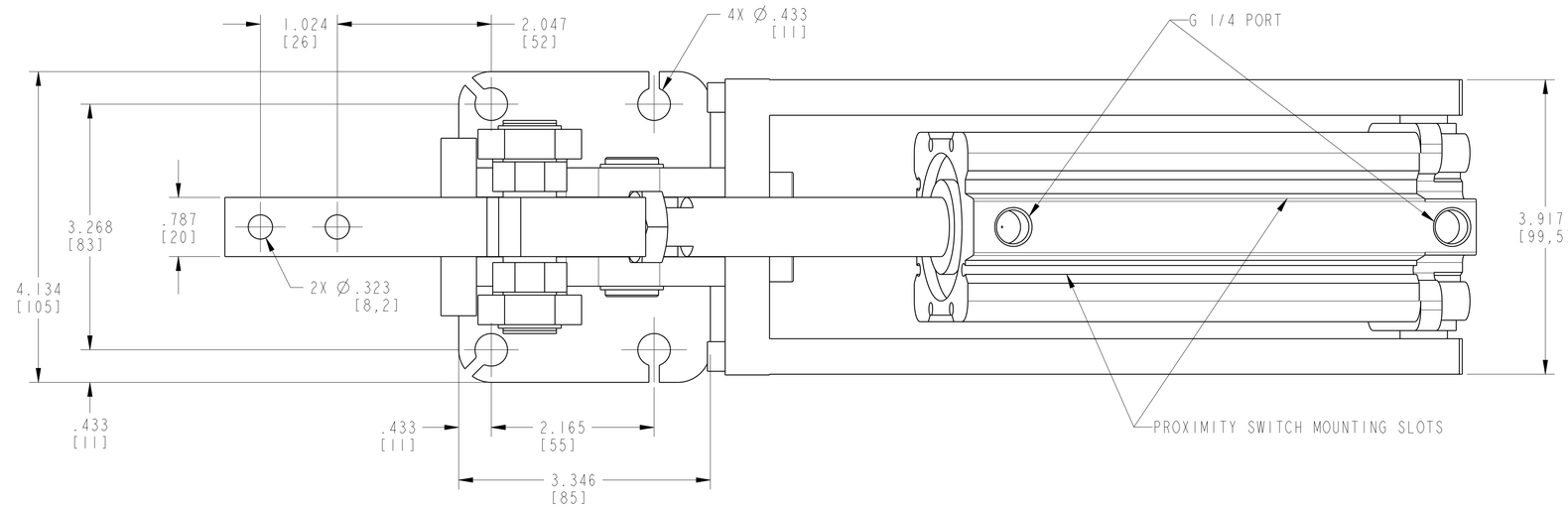

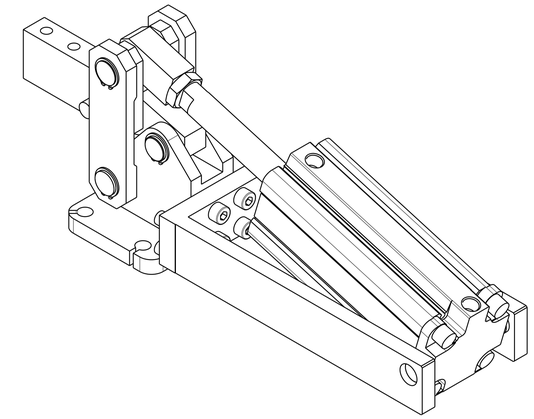

ILCP92213 REV E ECN5219

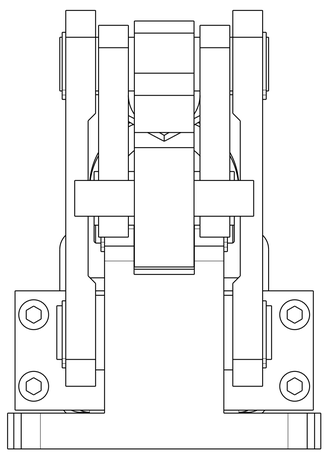

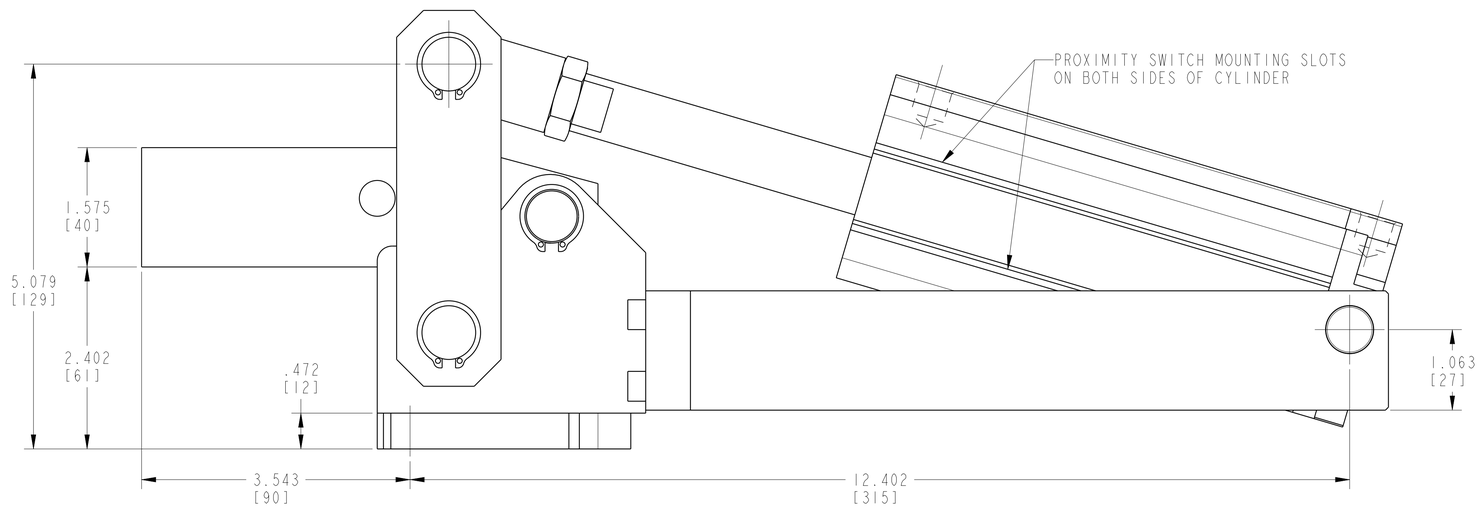

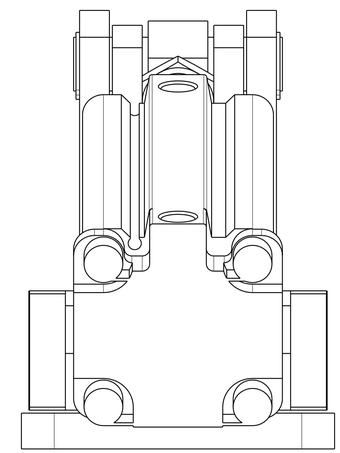

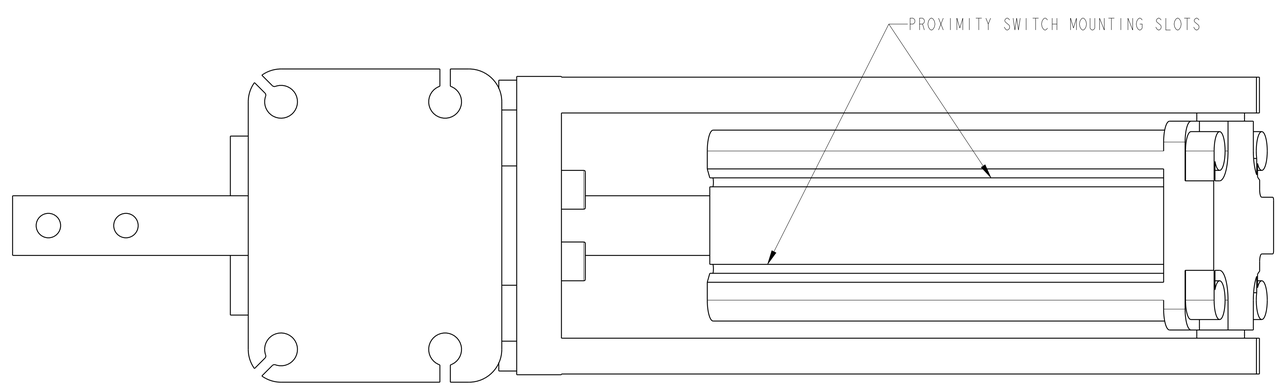

CAD CONTROL DRAWING

VEKTEK®
VEKTEK, INC.
1334 E. SIXTH AVE. P.O. BOX 625
EMPORIA, KS. 66801 U.S.A.

E	5219	RELEASE	RLK	12/20/23	P92213	B
REV	IN ACCORDANCE WITH ECN	EFFECTIVE DATE	REVISED BY	DATE	REFERENCE MODEL	REF REV

CLAMP, TOGGLE, HD, HORZ, 6

DRW BY: K. ROEMER
DATE: 12-12-06

DRAWING STATUS: Released
PRODUCTION APPROVED FOR RELEASED STATUS ONLY

TOLERANCES DO NOT APPLY
DIMENSIONS ARE NOMINAL

SIZE D | ILCP92213 | REV E

SHEET 1 OF 1

FORM FEG036, Rev. B

@Copyright 1986-2026 by Vektek LLC******* *****