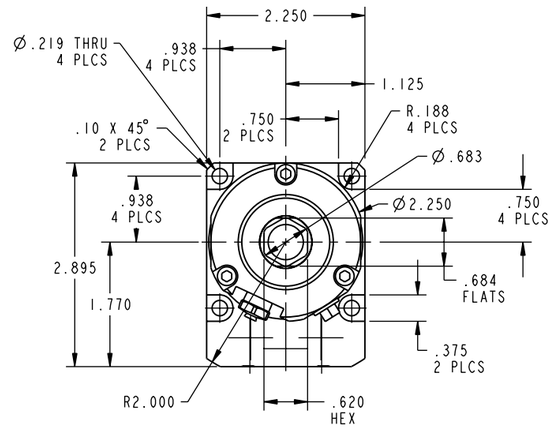

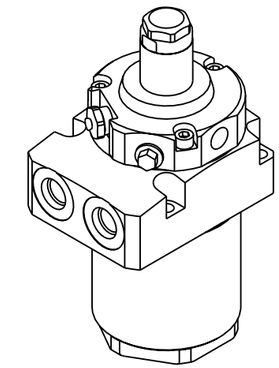

ILC10020801 REV A ECN 2215

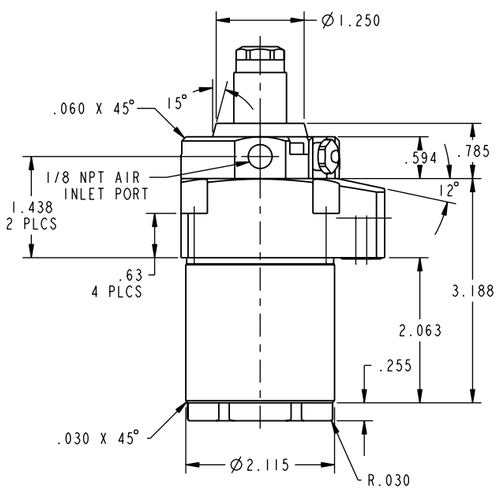

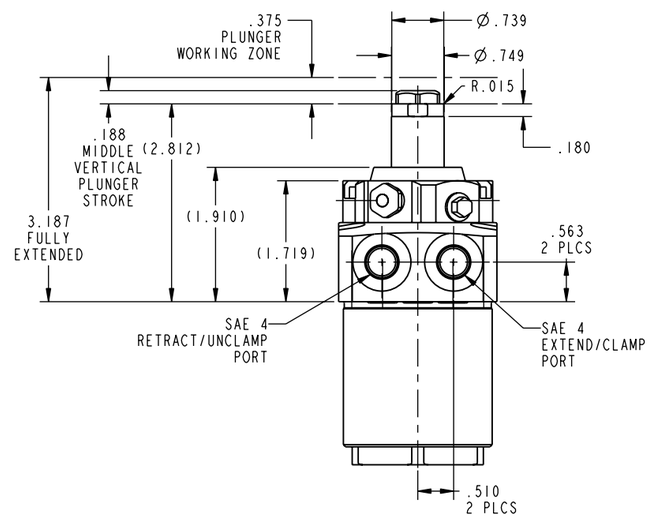

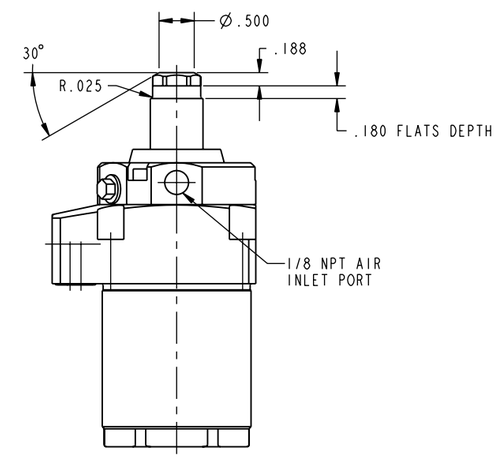

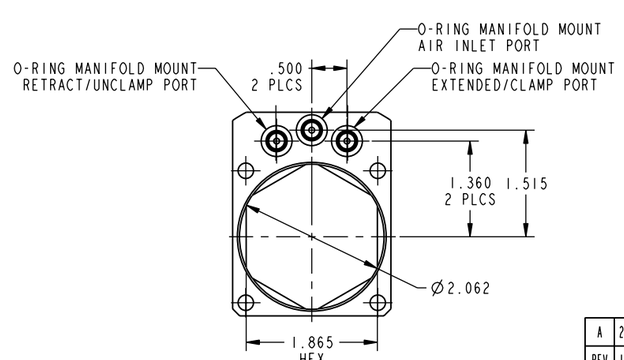

CAD CONTROL DRAWING

VEKTEK
VEKTEK, INC.
1334 E. SIXTH AVE. P.O. BOX 625
EMPORIA, KS. 66801 U.S.A.

A	2215	RELEASE	ALUTHI	12-15-10	10020801	A	WS, DA, CGS, TF, RPS, 2750
REV	IN ACCORDANCE WITH ECN	EFFECTIVE DATE	REVISED BY	DATE	REFERENCE MODEL	REF REV	`` `` ``
DRW BY: ALUTHI	DRAWING STATUS: **Released**				TOLERANCES DO NOT APPLY	SIZE D	ILC10020801 REV A
DATE: 10-22-10	PRODUCTION APPROVED FOR RELEASED STATUS ONLY				DIMENSIONS ARE NOMINAL		

SHEET 1 OF 1

FORM FEG036, Rev. A

@Copyright 1986-2026 by Vektek LLC******* *****

****