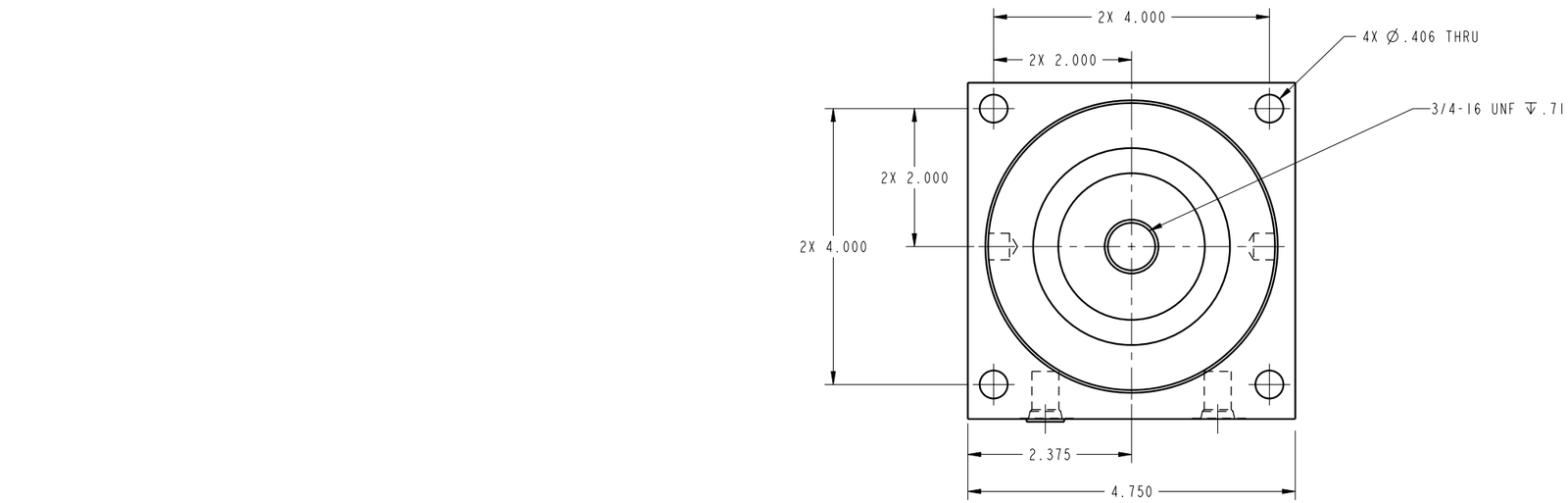

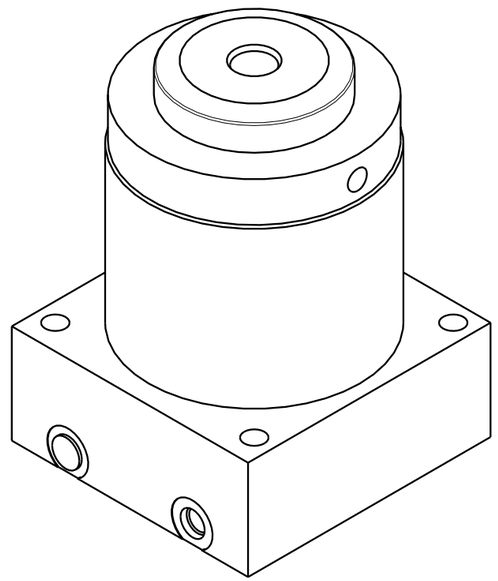

ILC10052910 REV A ECN 2527
SCALE 1.000

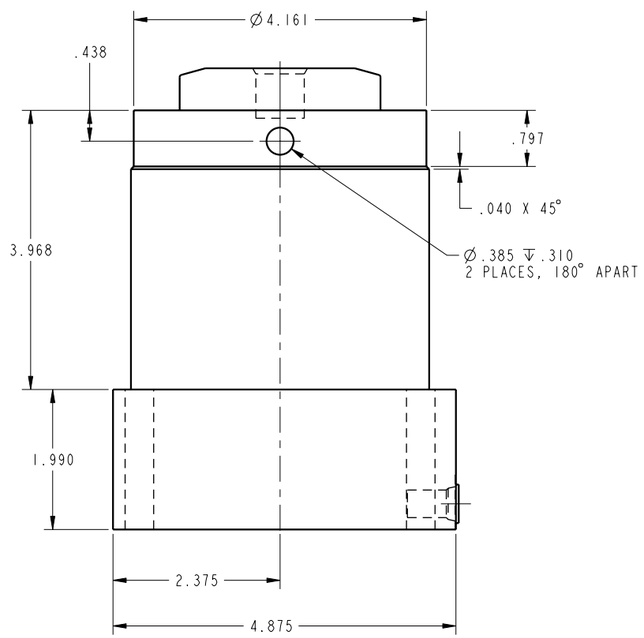

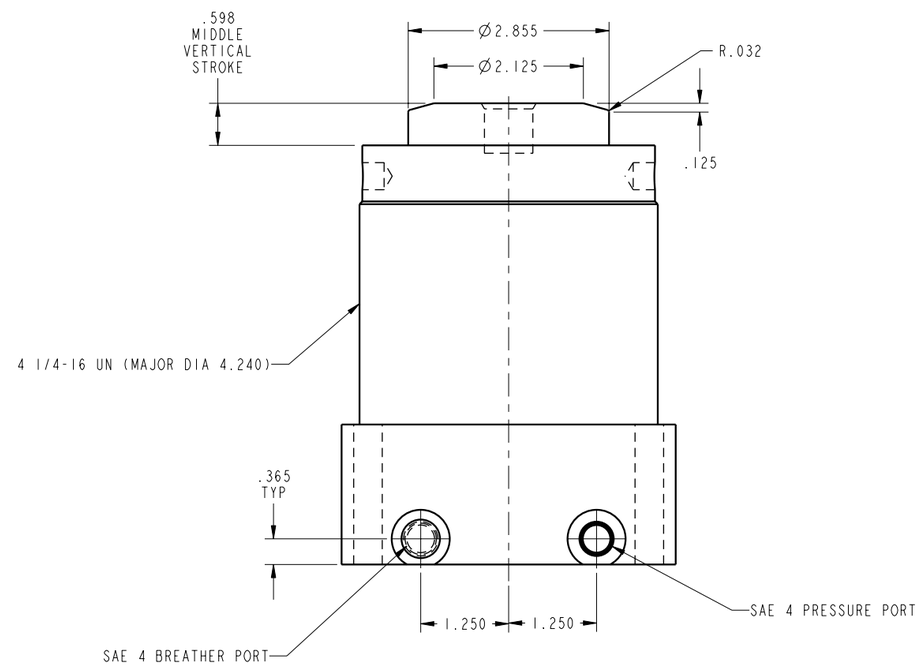

CAD CONTROL DRAWING

VEKTEK
VEKTEK, INC.
1334 E. SIXTH AVE. P.O. BOX 625
EMPORIA, KS. 66801 U.S.A.

A	2527	RELEASE	JDW	05/17/13	10052910	G	WS, SPR, BM, 20000
REV	IN ACCORDANCE WITH ECN	EFFECTIVE DATE	REVISED BY	DATE	REFERENCE MODEL	REF REV	
DRW BY: JDW	DRAWING STATUS: **Released**				TOLERANCES DO NOT APPLY	SIZE	ILC10052910 REV A
DATE: 05/17/13	PRODUCTION APPROVED FOR RELEASED STATUS ONLY				DIMENSIONS ARE NOMINAL	D	

SHEET 1 OF 1

FORM FEG036, Rev. A

@Copyright 1986-2026 by Vektek LLC******* *****

****