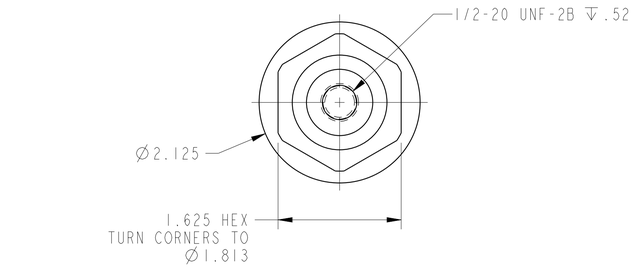

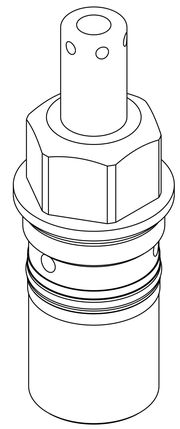

ILC14121301L REV E ECN 2510

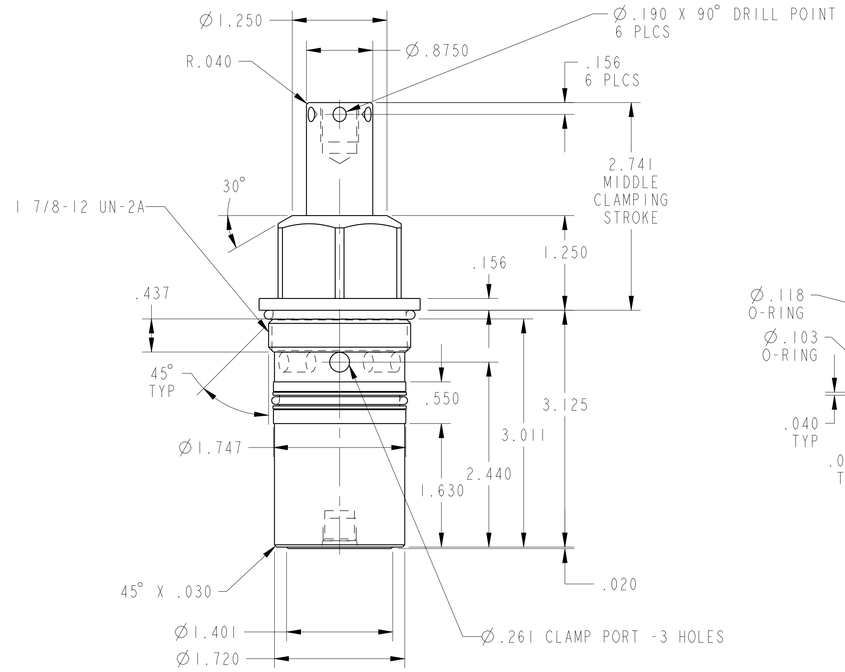

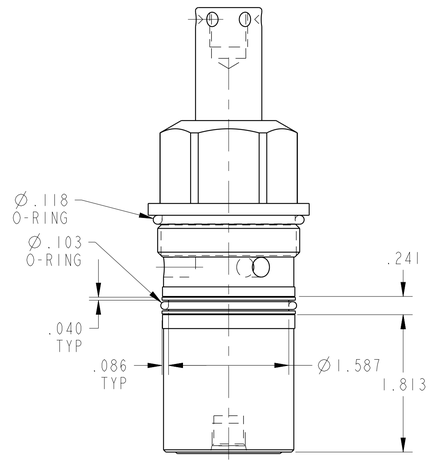

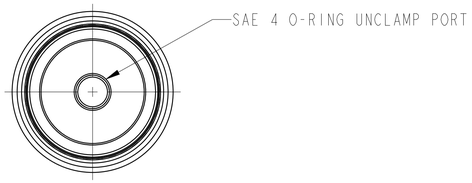

CAD CONTROL DRAWING

VEKTEK®

VEKTEK, INC.
1334 E. SIXTH AVE. P.O. BOX 625
EMPORIA, KS. 66801 U.S.A.

E	2510	RELEASED	JDW	04/08/13	14121301L	A	SC, HS, CM, DA, 2600, LH
REV	IN ACCORDANCE WITH ECN	EFFECTIVE DATE	REVISED BY	DATE	REFERENCE MODEL	REF REV	

DRW BY: K. ROEMER
DATE: 03/28/08

DRAWING STATUS: **Released**
PRODUCTION APPROVED FOR RELEASED STATUS ONLY

TOLERANCES DO NOT APPLY
DIMENSIONS ARE NOMINAL

SIZE D | ILC14121301L | REV E

SHEET 1 OF 1

@Copyright 1986-2026 by Vektek LLC******* *****

****

FORM FEG036, Rev. B