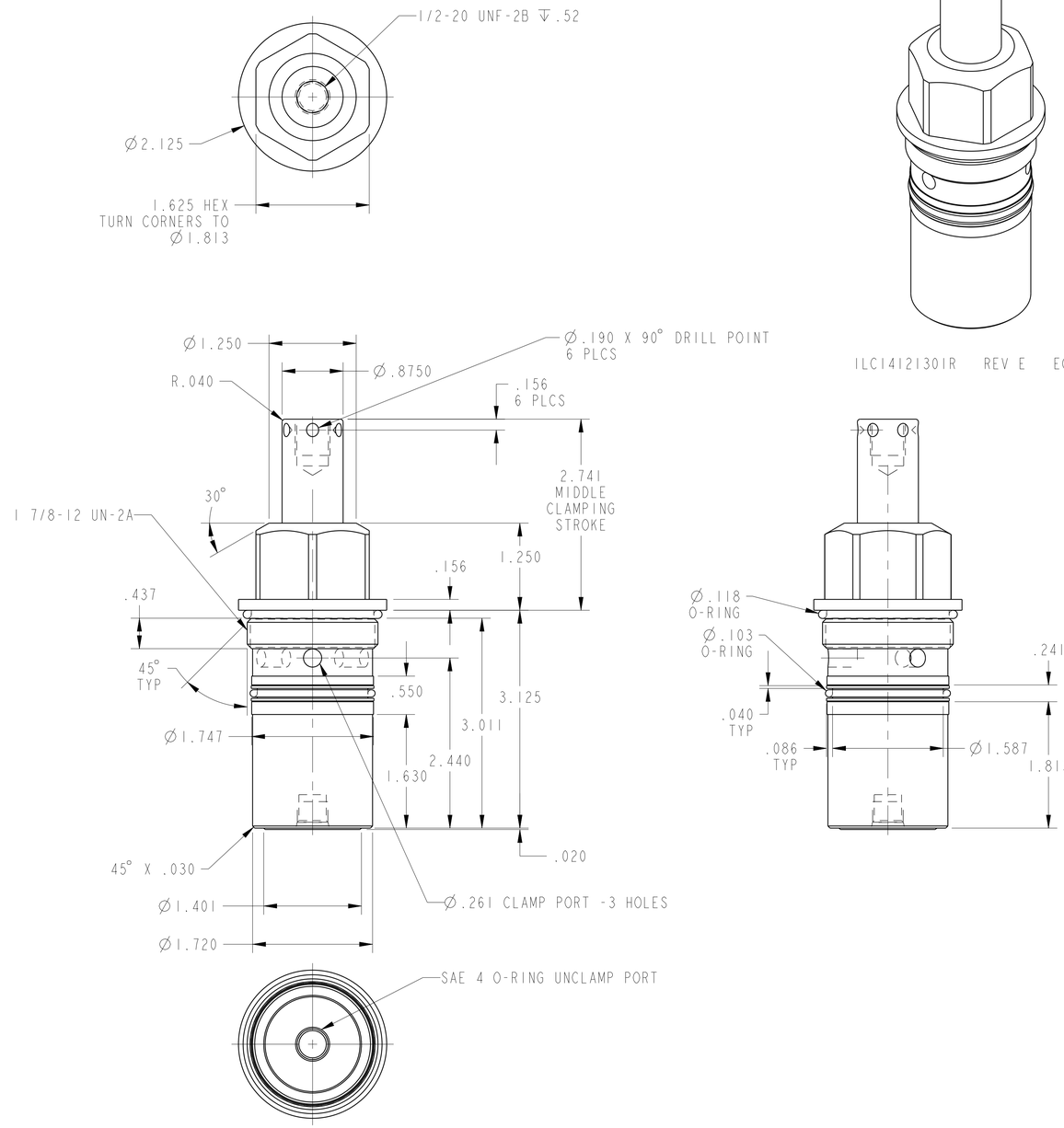


ILC14121301R REV E ECN 2510

# CAD CONTROL DRAWING

VEKTEK®

VEKTEK, INC.
1334 E. SIXTH AVE. P.O. BOX 625
EMPORIA, KS. 66801 U.S.A.

| | | | | | | | |
|---|---|---|---|---|---|---|---|
| E | 2510 | RELEASED | JDW | 04/08/13 | 14121301R | A | SC, HS, CM, DA, 2600, RH |
| REV | IN ACCORDANCE WITH ECN | EFFECTIVE DATE | REVISED BY | DATE | REFERENCE MODEL | REF REV | |

DRW BY: K. ROEMER
DATE: 03/28/08

DRAWING STATUS: **Released**
PRODUCTION APPROVED FOR RELEASED STATUS ONLY

TOLERANCES DO NOT APPLY
DIMENSIONS ARE NOMINAL

SIZE D | ILC14121301R | REV E

SHEET 1 OF 1

@Copyright 1986-2026 by Vektek LLC******* *****

**********

FORM FEG036, Rev. B