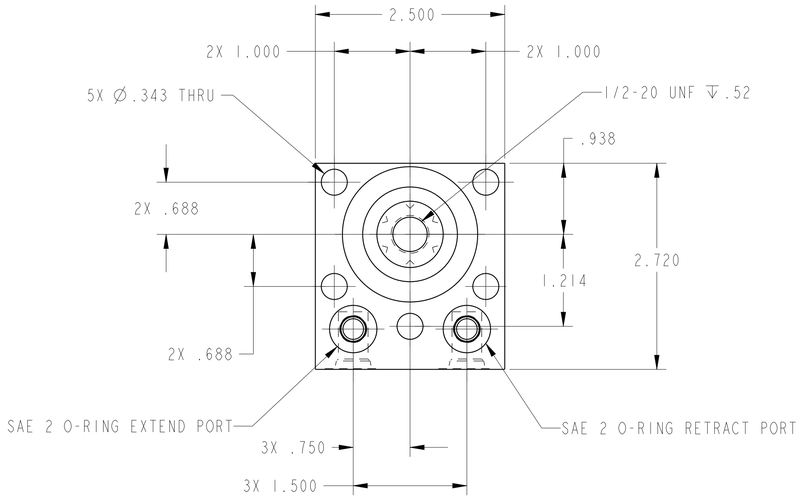

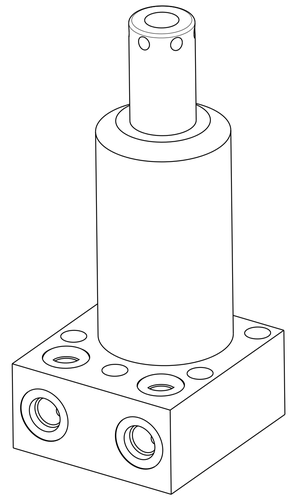

ILC14221301L REV E ECN 3505
SCALE 1.000

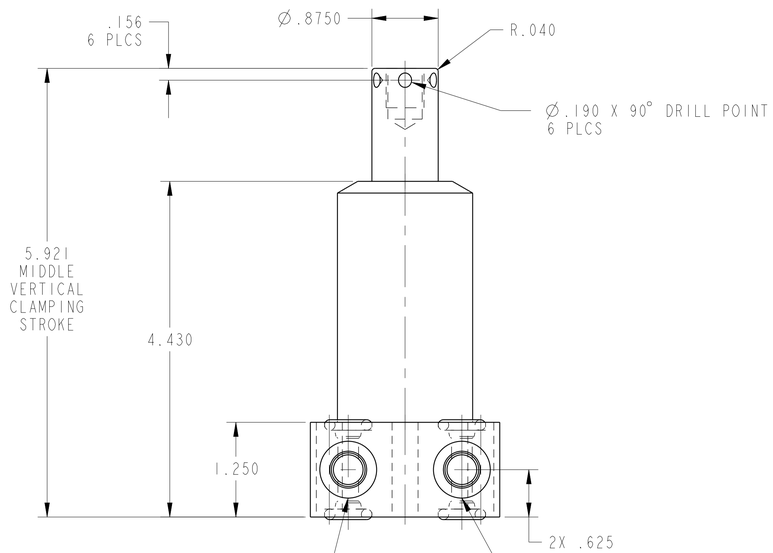

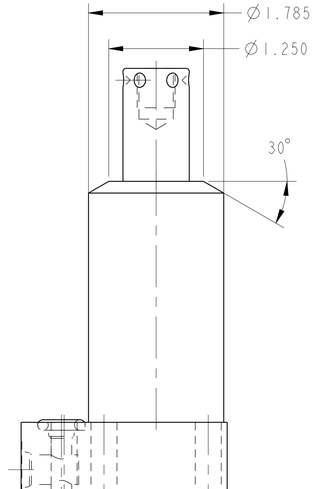

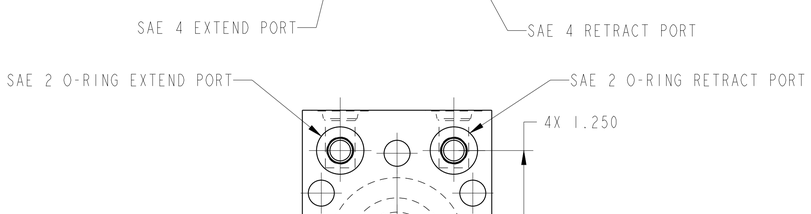

CAD CONTROL DRAWING

VEKTEK®
VEKTEK, INC.
1334 E. SIXTH AVE. P.O. BOX 625
EMPORIA, KS. 66801 U.S.A.

E	3505	RELEASE	ATHOMSEN	15-JUN-2018	14221301L	C	SC, BF, DA, HS, LH, 2600
REV	IN ACCORDANCE WITH ECN	EFFECTIVE DATE	REVISED BY	DATE	REFERENCE MODEL	REF REV	```
DRW BY: K. ROEMER	DRAWING STATUS: **Released**				TOLERANCES DO NOT APPLY	SIZE	REV
DATE: 02-09-05	PRODUCTION APPROVED FOR RELEASED STATUS ONLY				DIMENSIONS ARE NOMINAL	D	ILC14221301L	E

SHEET 1 OF 1

@Copyright 1986-2026 by Vektek LLC******* *****

****

FORM FEG036, Rev. B