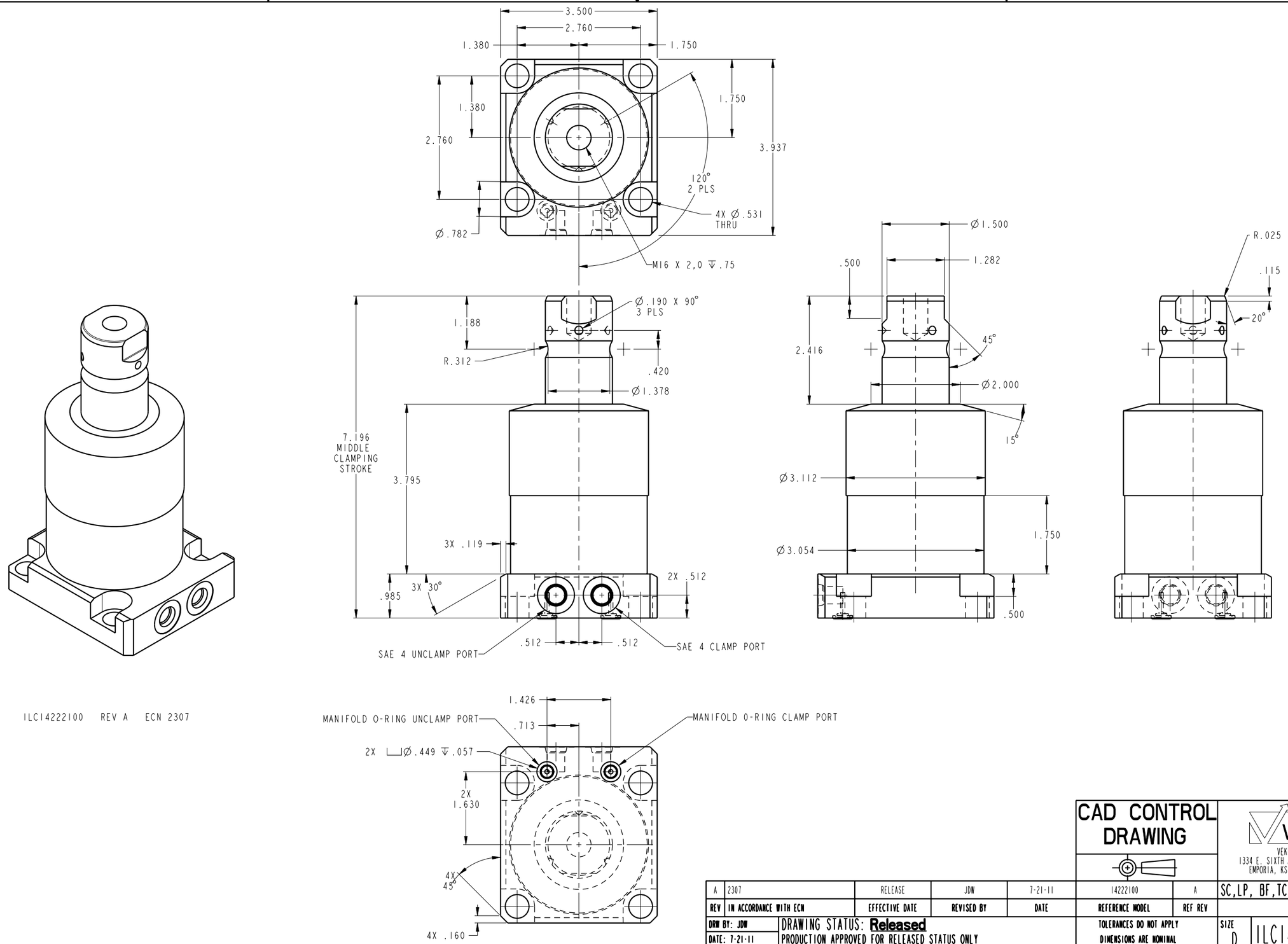


| | | | | | | | |
|---|---|---|---|---|---|---|---|
| A | 2307 | RELEASE | JDW | 7-21-11 | 14222100 | A | SC,LP, BF,TC,7500,DA,RH |
| REV | IN ACCORDANCE WITH ECN | EFFECTIVE DATE | REVISED BY | DATE | REFERENCE MODEL | REF REV | |

DRW BY: JDW
DATE: 7-21-11

DRAWING STATUS: **Released**
PRODUCTION APPROVED FOR RELEASED STATUS ONLY

TOLERANCES DO NOT APPLY
DIMENSIONS ARE NOMINAL

SIZE D | ILC14222100 | REV A

CAD CONTROL DRAWING

VEKTEK
VEKTEK, INC.
1334 E. SIXTH AVE. P.O. BOX 625
EMPORIA, KS. 66801 U.S.A.

SHEET 1 OF 1

FORM FEG036, Rev. B

@Copyright 1986-2026 by Vektek LLC******* *****

**********