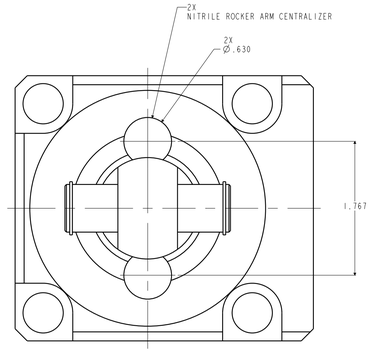

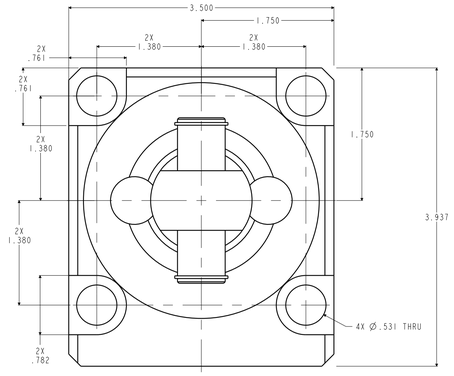

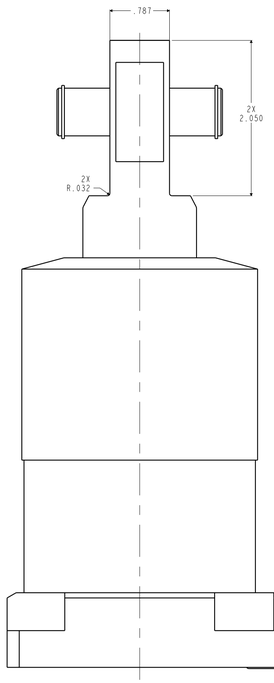

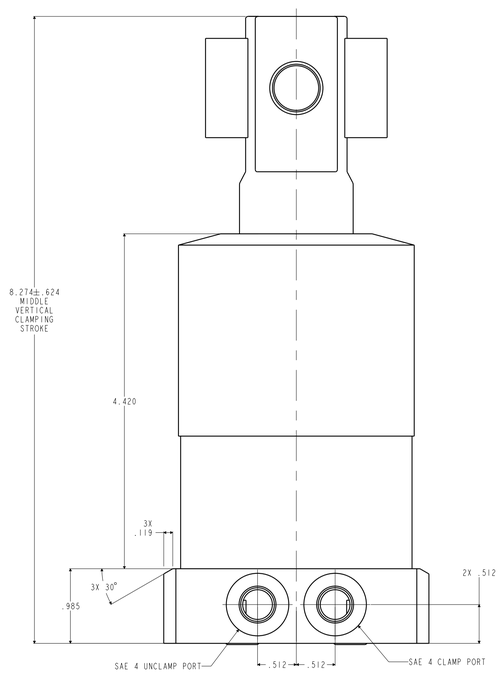

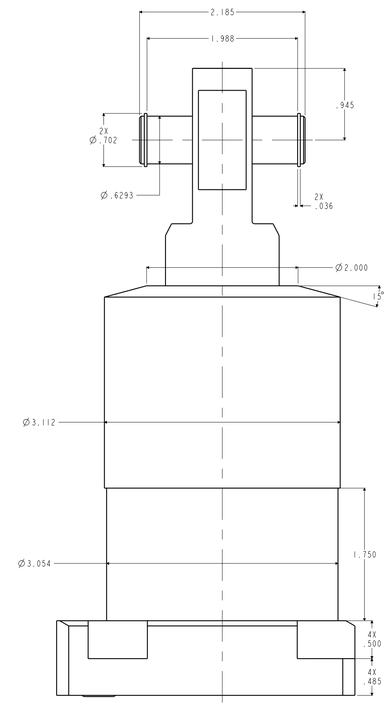

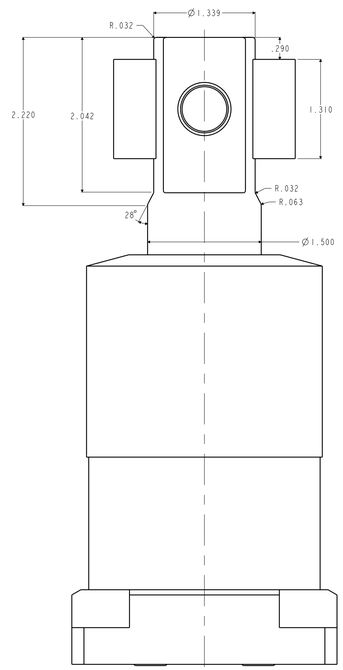

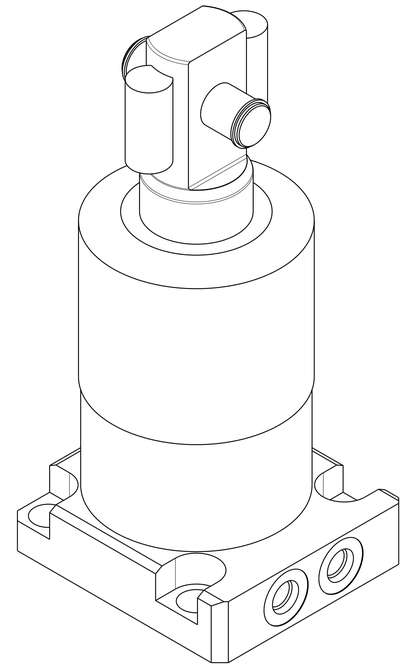

ILC14222123 REV A ECN 5921

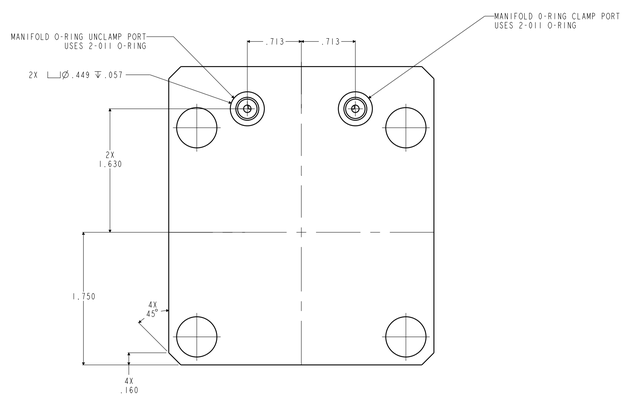

A	5921	RELEASE	JDW	03/09/26	14222123	A	SC,LP,BF,TC,8800,DA,RH,LS,CLEVIS
REV	IN ACCORDANCE WITH ECN	EFFECTIVE DATE	REVISED BY	DATE	REFERENCE MODEL	REF REV	
DRW BY: JDW	DRAWING STATUS: Released				TOLERANCES DO NOT APPLY	SIZE	ILC14222123 REV A
DATE: 03/09/26	PRODUCTION APPROVED FOR RELEASED STATUS ONLY				DIMENSIONS ARE NOMINAL	D	

CAD CONTROL DRAWING

VEKTEK®
VEKTEK, INC.
1334 E. SIXTH AVE. P.O. BOX 625
EMPORIA, KS. 66801 U.S.A.

SHEET 1 OF 1

@Copyright 1986-2026 by Vektek LLC******* *****

FORM FEG036, Rev. B