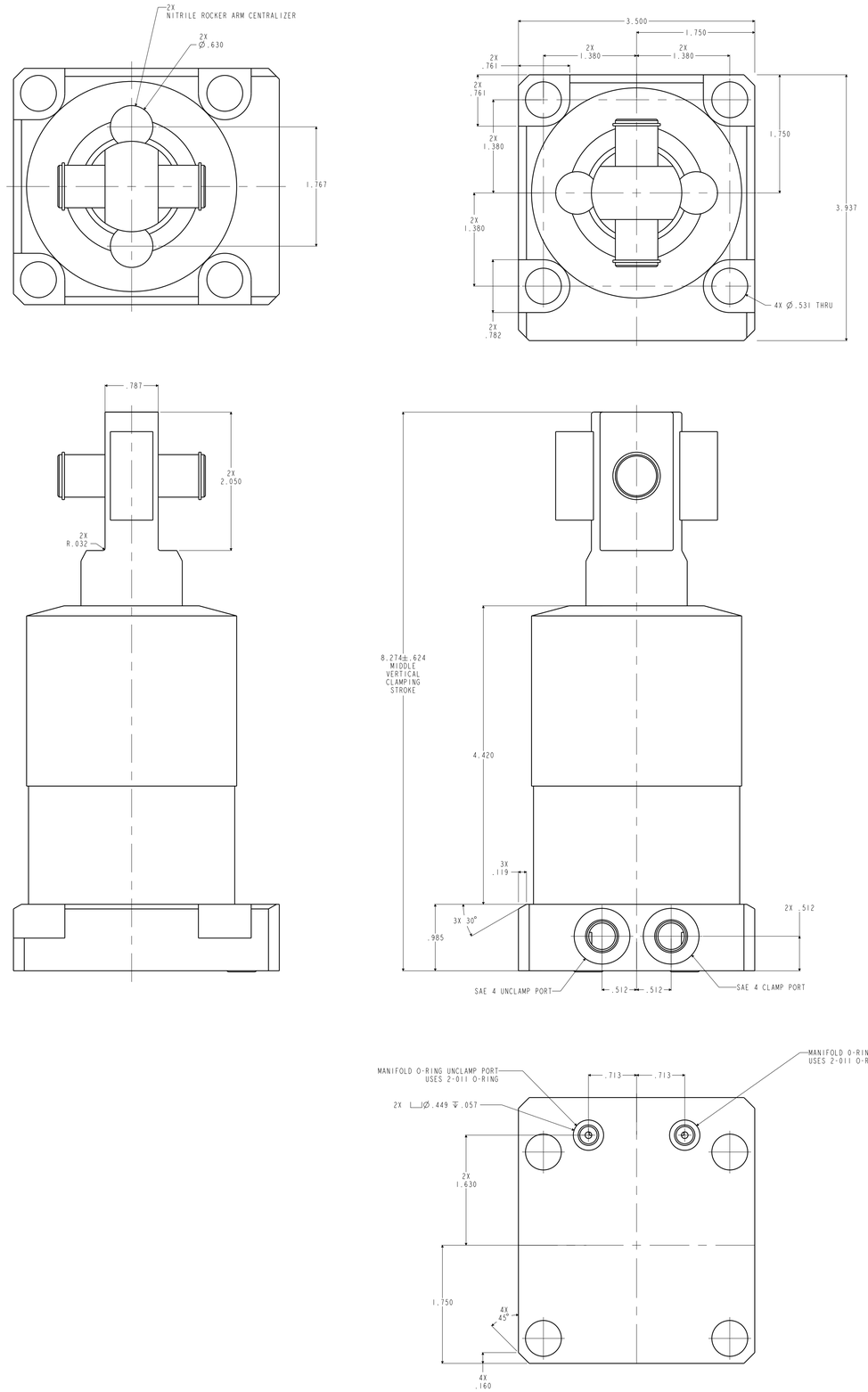

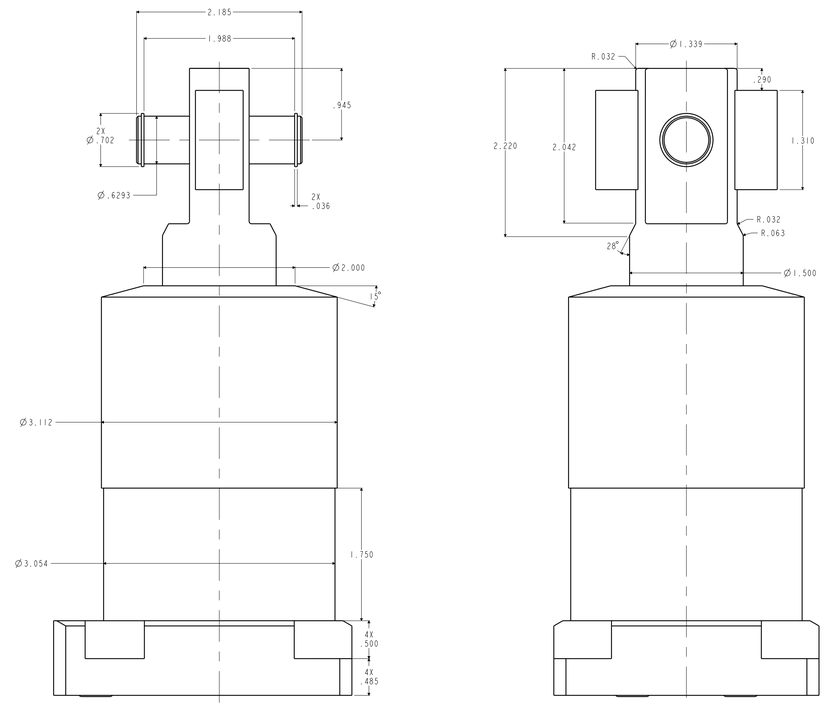

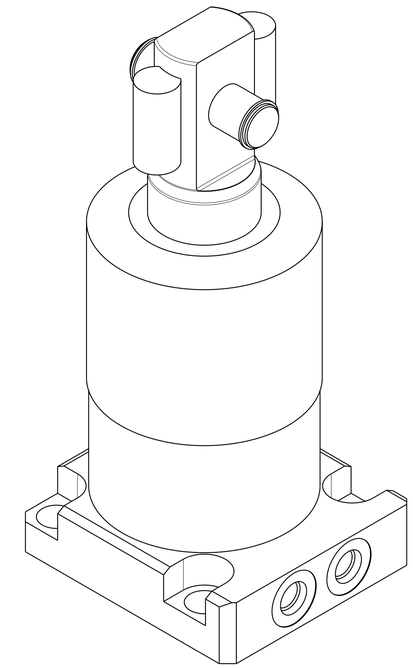

ILC14222124 REV A ECN 5921

A	5921	RELEASE	JDW	03/09/26	14222124	A	SC,LP,BF,TC,8800,DA,LH,LS,CLEVIS
REV	IN ACCORDANCE WITH ECN	EFFECTIVE DATE	REVISED BY	DATE	REFERENCE MODEL	REF REV	
DRW BY: JDW	DRAWING STATUS: Released				TOLERANCES DO NOT APPLY	SIZE	REV
DATE: 03/09/26	PRODUCTION APPROVED FOR RELEASED STATUS ONLY				DIMENSIONS ARE NOMINAL	D	ILC14222124 A

CAD CONTROL DRAWING

VEKTEK®

VEKTEK, INC.
1334 E. SIXTH AVE. P.O. BOX 625
EMPORIA, KS. 66801 U.S.A.

SHEET 1 OF 1

@Copyright 1986-2026 by Vektek LLC******* *****

********** FORM FEG036, Rev. B