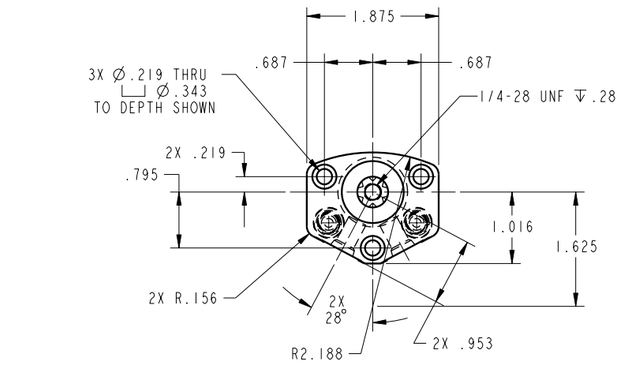

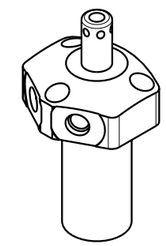

ILC14620501L REV D ECN 2510

SCALE 1.000

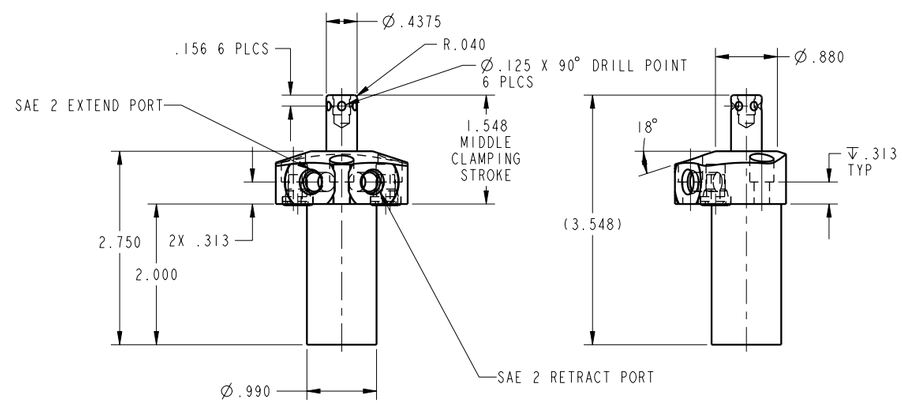

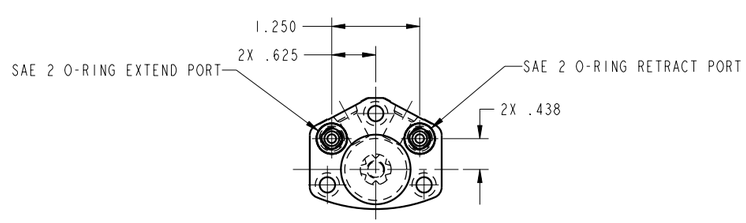

CAD CONTROL DRAWING

VEKTEK

VEKTEK, INC.
1334 E. SIXTH AVE. P.O. BOX 625
EMPORIA, KS. 66801 U.S.A.

D	2510	RELEASE	JDW	04/04/13	14620501L	D	SC, TF, DA, HS, LH, 450
REV	IN ACCORDANCE WITH ECN	EFFECTIVE DATE	REVISED BY	DATE	REFERENCE MODEL	REF REV	```

DRW BY: K. ROEMER
DATE: 02-12-02

DRAWING STATUS: **Released**
PRODUCTION APPROVED FOR RELEASED STATUS ONLY

TOLERANCES DO NOT APPLY
DIMENSIONS ARE NOMINAL

SIZE D | ILC14620501L | REV D

SHEET 1 OF 1

FORM FEG036, Rev. A

@Copyright 1986-2026 by Vektek LLC******* *****

****