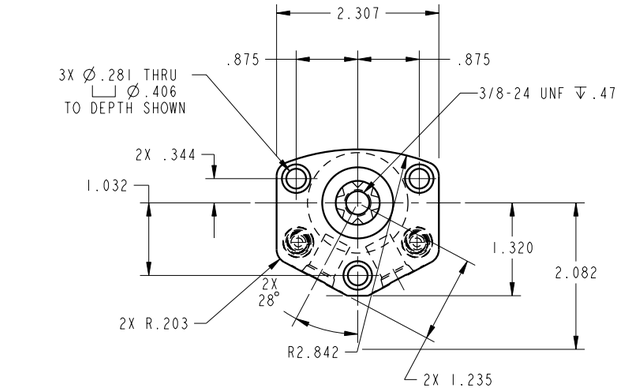

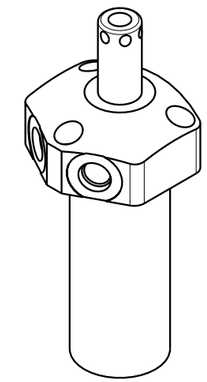

ILC14620910R REV D ECN 2510

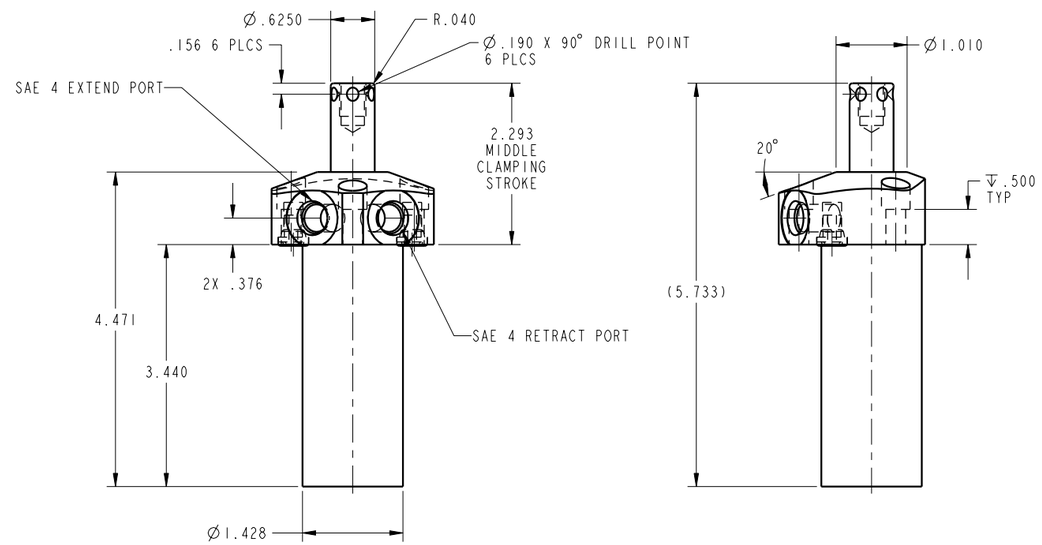

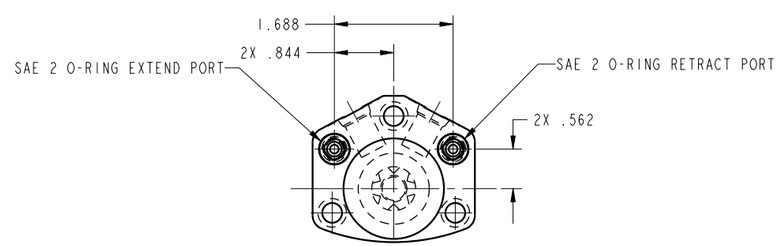

CAD CONTROL DRAWING

VEKTEK
VEKTEK, INC.
1334 E. SIXTH AVE. P.O. BOX 625
EMPORIA, KS. 66801 U.S.A.

D	2510	RELEASE	JDW	04/04/13	14620910R	A	SC, HS, TF, 1100, LS, DA, RH
REV	IN ACCORDANCE WITH ECN	EFFECTIVE DATE	REVISED BY	DATE	REFERENCE MODEL	REF REV	```
DRW BY: K. ROEMER	DRAWING STATUS: **Released**				TOLERANCES DO NOT APPLY	SIZE	REV
DATE: 02-12-02	PRODUCTION APPROVED FOR RELEASED STATUS ONLY				DIMENSIONS ARE NOMINAL	D	ILC14620910R D

SHEET 1 OF 1

FORM FEG036, Rev. A

@Copyright 1986-2026 by Vektek LLC******* *****

****