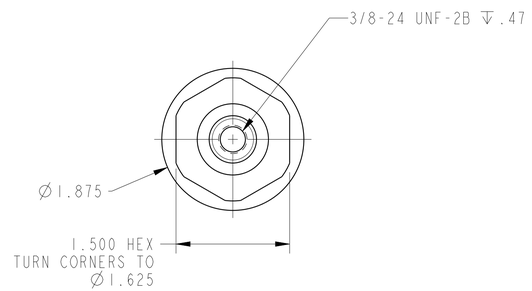

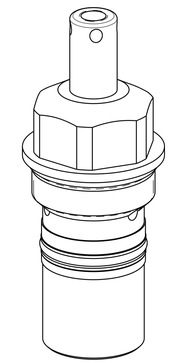

ILC15110902L REV A ECN4446

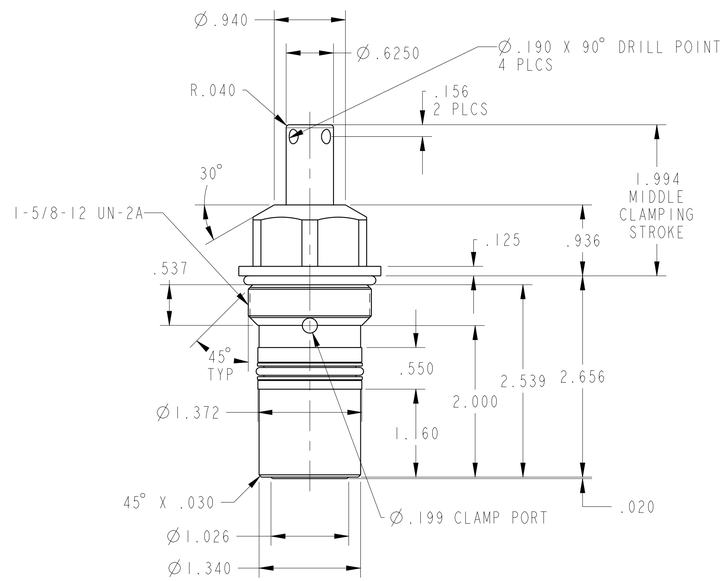

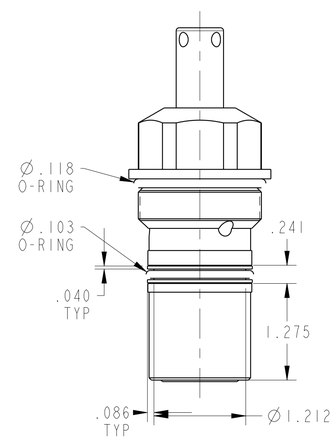

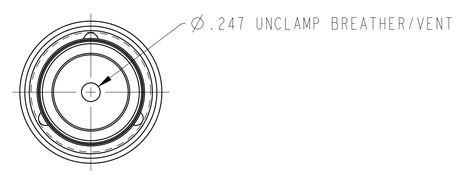

CAD CONTROL DRAWING

VEKTEK®
VEKTEK, INC.
1334 E. SIXTH AVE. P.O. BOX 625
EMPORIA, KS. 66801 U.S.A.

A	4446	RELEASED	ALS	5/17/21	15110902L	A	SC, CM, 1100, SA, LH
REV	IN ACCORDANCE WITH ECN	EFFECTIVE DATE	REVISED BY	DATE	REFERENCE MODEL	REF REV	

DRW BY: ALS
DATE: 5/17/21
DRAWING STATUS: Released
PRODUCTION APPROVED FOR RELEASED STATUS ONLY
TOLERANCES DO NOT APPLY
DIMENSIONS ARE NOMINAL
SIZE D | ILC15110902L | REV A
SHEET 1 OF 1

© Copyright 1986-2026 by Vektek LLC******* *****
@Copyright 1986-2026 by Vektek LLC******* *****

FORM FEG036, Rev. B