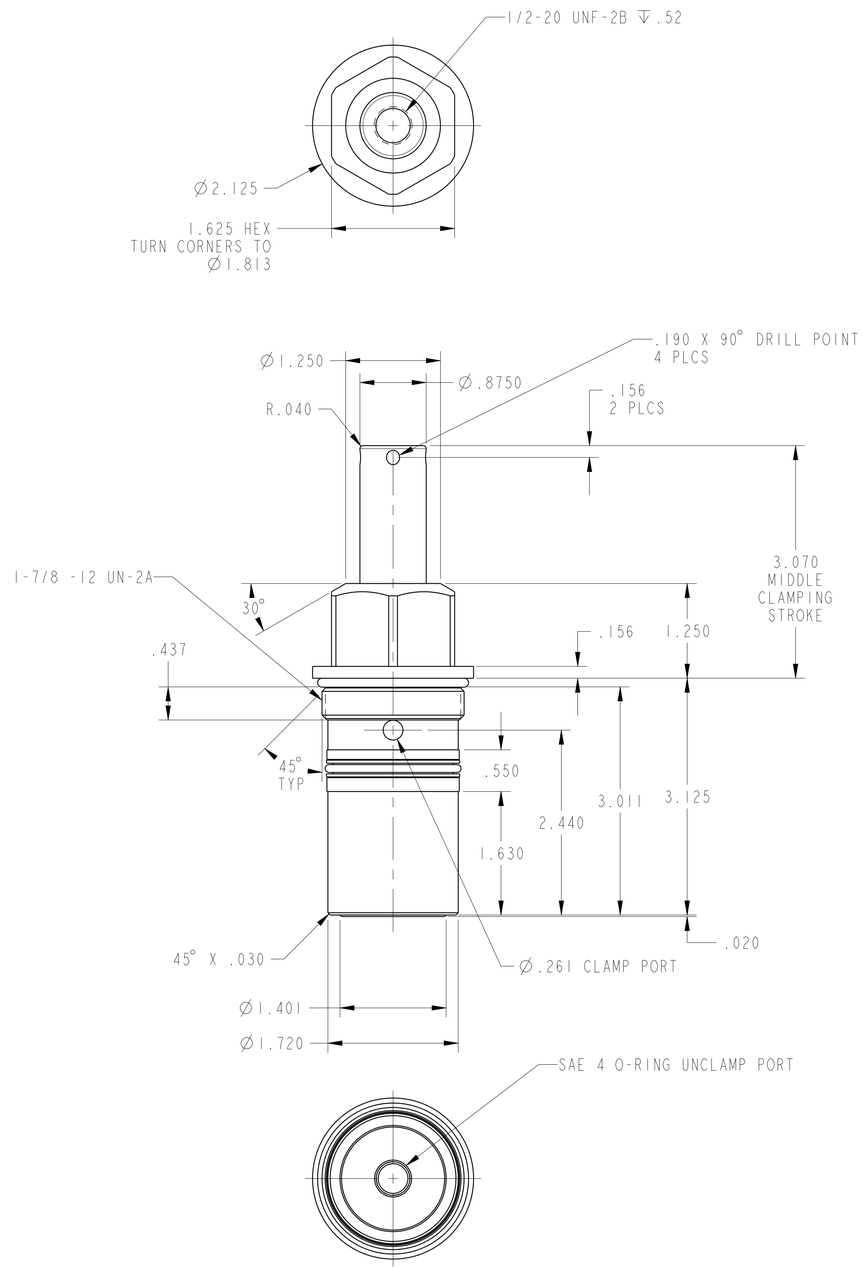

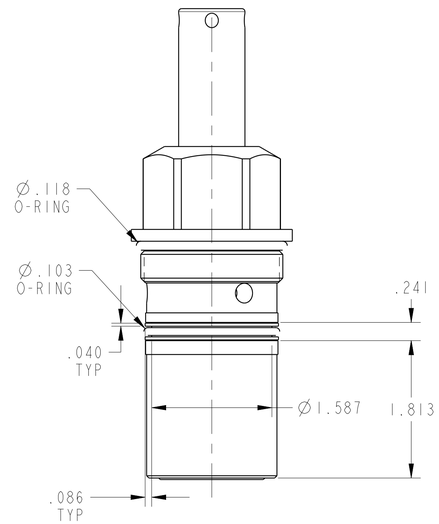

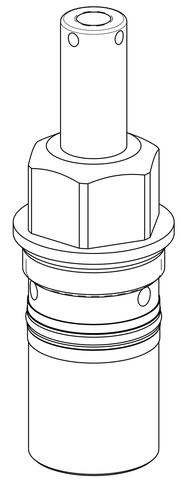

ILC15121302S REV A ECN4446

A	4446	RELEASED	ALS	5/17/21	15121302S	A	SC, CM, 2600, DA, STR
REV	IN ACCORDANCE WITH ECN	EFFECTIVE DATE	REVISED BY	DATE	REFERENCE MODEL	REF REV	

DRW BY: ALS
DATE: 5/17/21

DRAWING STATUS: Released
PRODUCTION APPROVED FOR RELEASED STATUS ONLY

TOLERANCES DO NOT APPLY
DIMENSIONS ARE NOMINAL

SIZE D | ILC15121302S | REV A

CAD CONTROL DRAWING

VEKTEK®
VEKTEK, INC.
1334 E. SIXTH AVE. P.O. BOX 625
EMPORIA, KS. 66801 U.S.A.

SHEET 1 OF 1

FORM FEG036, Rev. B

© Copyright 1986-2026 by Vektek LLC******* *****
@Copyright 1986-2026 by Vektek LLC******* ***********