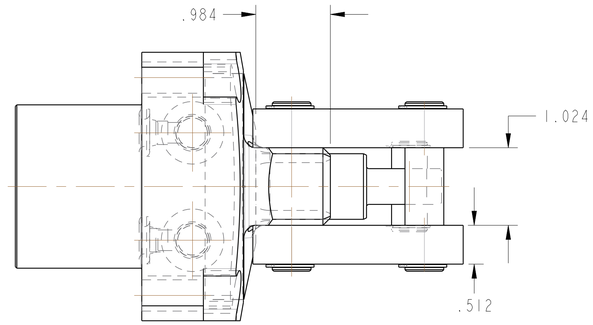

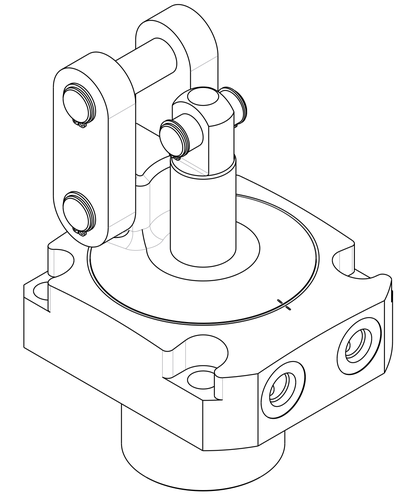

ILC16322800 REV B ECN 5054

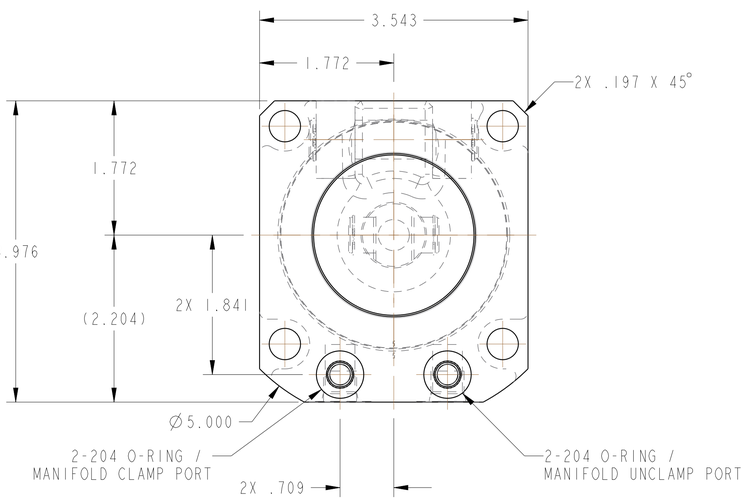

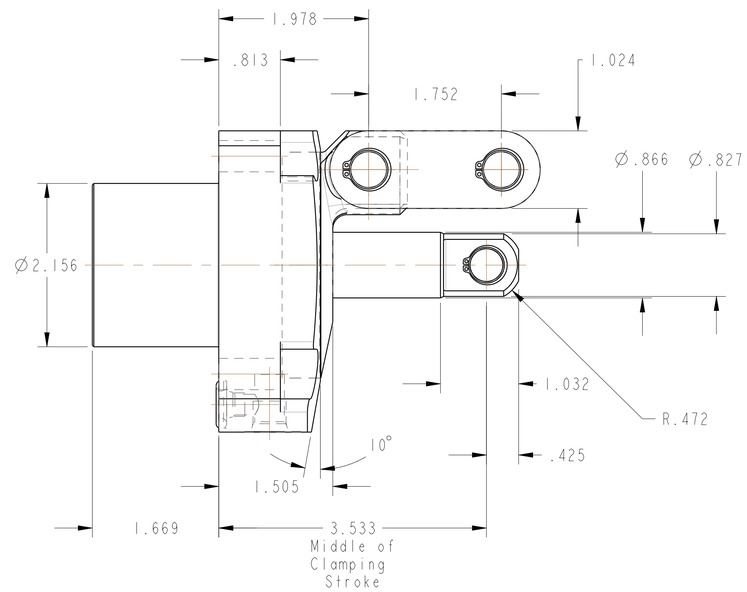

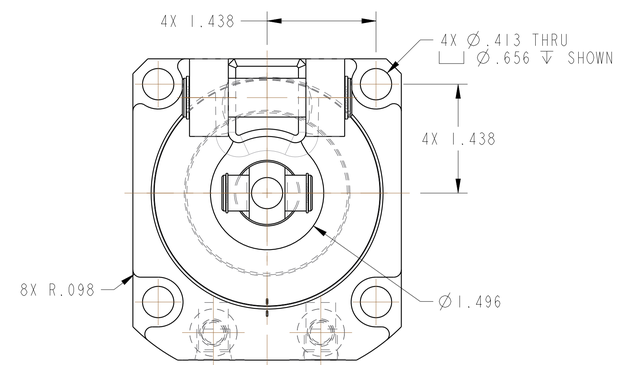

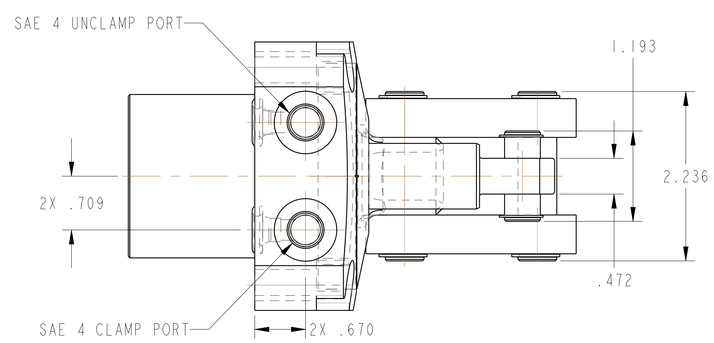

CAD CONTROL DRAWING

VEKTEK®

VEKTEK, INC.
1334 E. SIXTH AVE. P.O. BOX 625
EMPORIA, KS. 66801 U.S.A.

B	5054	RELEASE	RLK	3/14/23	16322800	BCD	LC, TL360, DA, 36001b
REV	IN ACCORDANCE WITH ECN	EFFECTIVE DATE	REVISED BY	DATE	REFERENCE MODEL	REF REV	
DRW BY: BCD	DRAWING STATUS: Released				TOLERANCES DO NOT APPLY	SIZE	REV
DATE: 6-21-16	PRODUCTION APPROVED FOR RELEASED STATUS ONLY				DIMENSIONS ARE NOMINAL	D	ILC16322800 B

SHEET 1 OF 1

@Copyright 1986-2026 by Vektek LLC******* *****

FORM FEG036, Rev. B