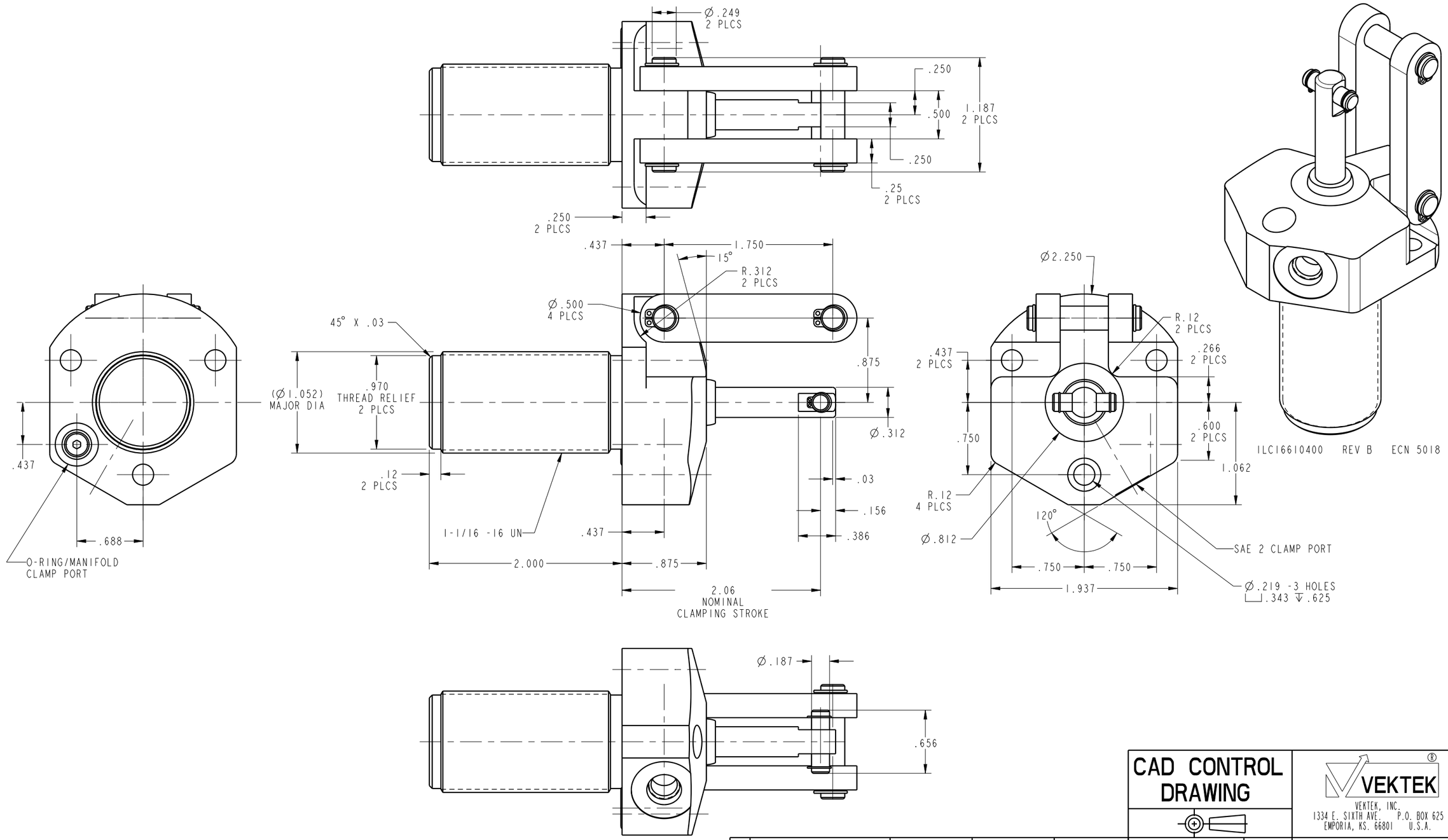

CAD CONTROL DRAWING

VEKTEK®
VEKTEK, INC.
1334 E. SIXTH AVE. P.O. BOX 625
EMPORIA, KS. 66801 U.S.A.

B	5018	RELEASE	RLK	2/3/23	16610400	F	LC, SA, 350
REV	IN ACCORDANCE WITH ECN	EFFECTIVE DATE	REVISED BY	DATE	REFERENCE MODEL	REF REV	```

DRW BY: K. ROEMER
DATE: 07-06-06

DRAWING STATUS: Released
PRODUCTION APPROVED FOR RELEASED STATUS ONLY

TOLERENCES DO NOT APPLY
DIMENSIONS ARE NOMINAL

SIZE B | ILC16610400 | REV B

SHEET 1 OF 1

FORM FEG036, Rev. B

@Copyright 1986-2026 by Vektek LLC******* *****

****