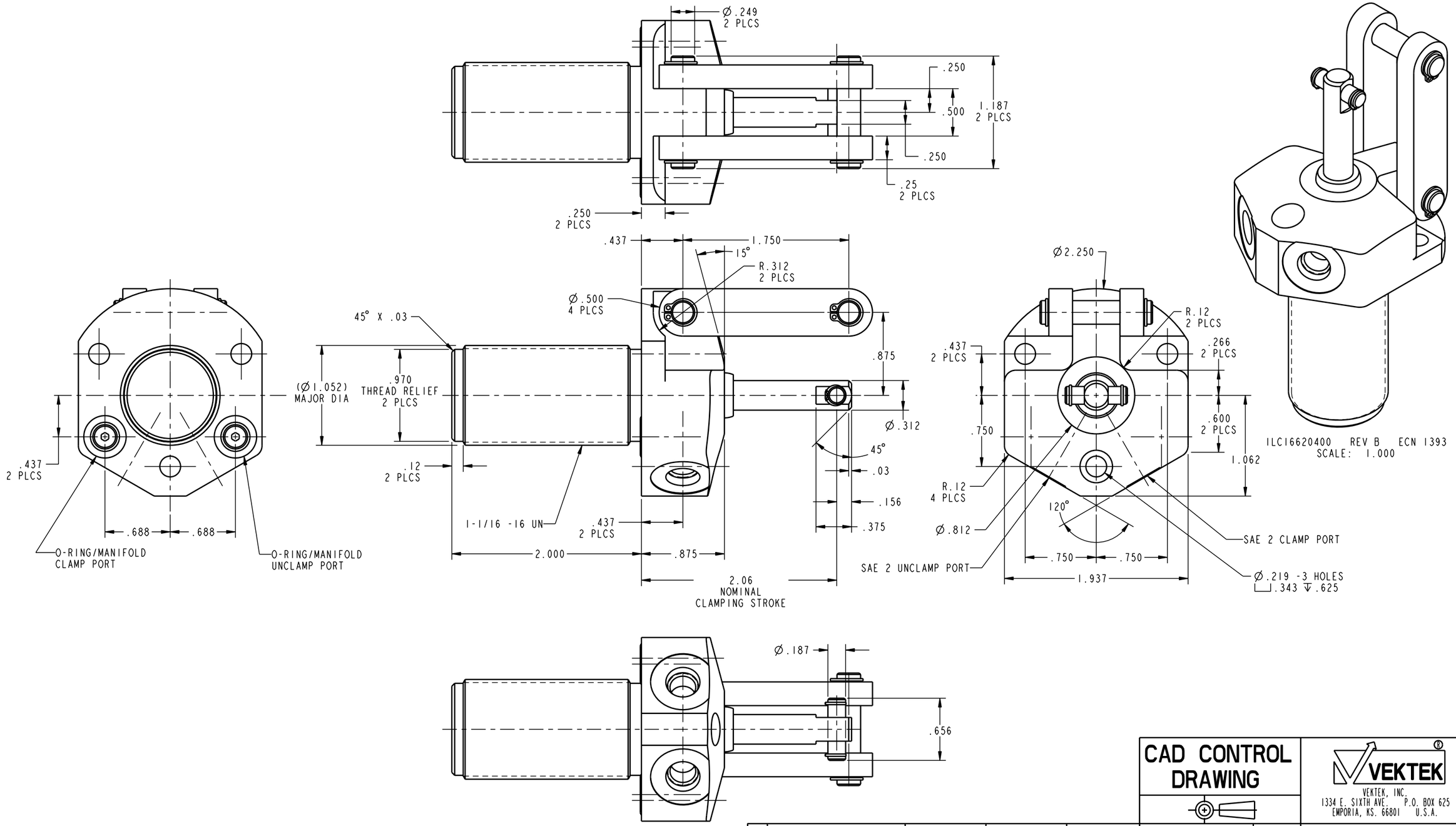

CAD CONTROL DRAWING

VEKTEK®
VEKTEK, INC.
1334 E. SIXTH AVE. P.O. BOX 625
EMPORIA, KS. 66801 U.S.A.

B	1393	RELEASE	K. ROEMER	10-13-05	16620400	A	LC, DA, 450
REV	IN ACCORDANCE WITH ECN	EFFECTIVE DATE	REVISED BY	DATE	REFERENCE MODEL	REF REV	```

DRW BY: K. ROEMER
DATE: 10/06/04

DRAWING STATUS: Released
PRODUCTION APPROVED FOR RELEASED STATUS ONLY

TOLERENCES DO NOT APPLY
DIMENSIONS ARE NOMINAL

SIZE B | ILC16620400 | REV B

SHEET 1 OF 1

FORM FEG036, Rev. A

@Copyright 1986-2026 by Vektek LLC******* *****

****