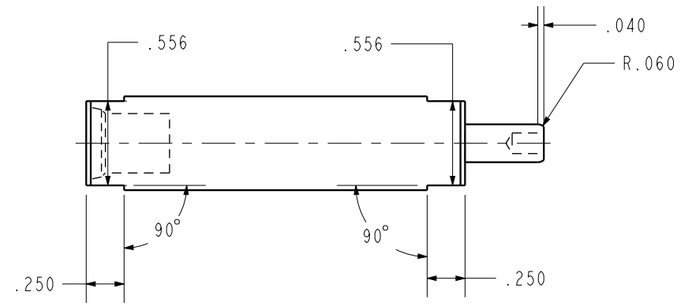

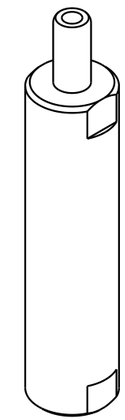

ILC20010407 REV C ECN 2920

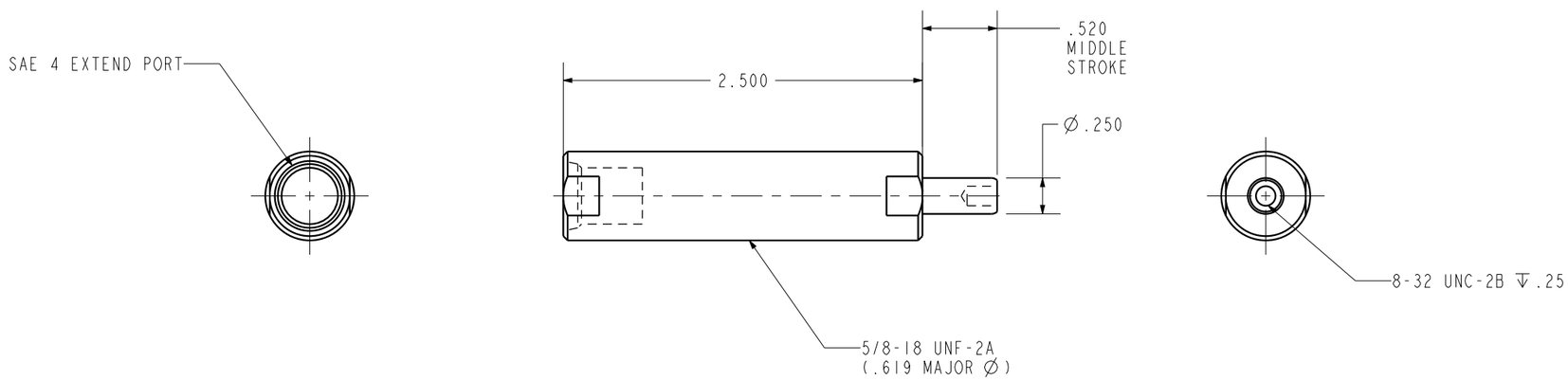

CAD CONTROL DRAWING

VEKTEK®
VEKTEK, INC.
1334 E. SIXTH AVE. P.O. BOX 625
EMPORIA, KS. 66801 U.S.A.

C	2920	RELEASE	JDW	09/18/15	20010407	H	CYL, TB, SA, .75 STRK, 550
REV	IN ACCORDANCE WITH ECN	EFFECTIVE DATE	REVISED BY	DATE	REFERENCE MODEL	REF REV	

DRW BY: K. ROEMER
DATE: 08-19-02

DRAWING STATUS: **Released**
PRODUCTION APPROVED FOR RELEASED STATUS ONLY

TOLERENCES DO NOT APPLY
DIMENSIONS ARE NOMINAL

SIZE B | ILC20010407 | REV C

SHEET 1 OF 1

FORM FEG036, Rev. B

@Copyright 1986-2026 by Vektek LLC******* *****

****