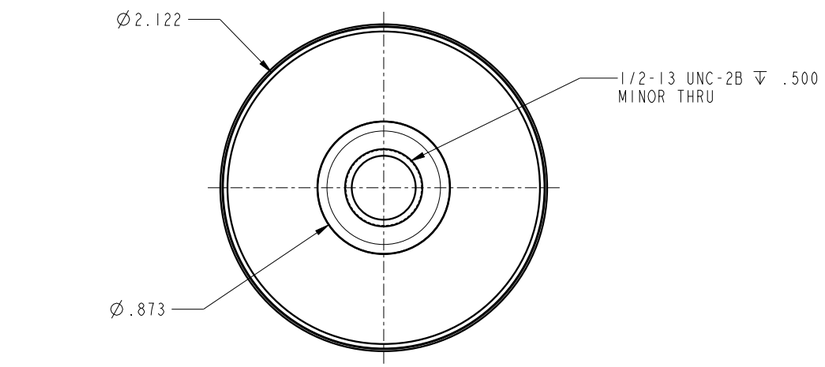

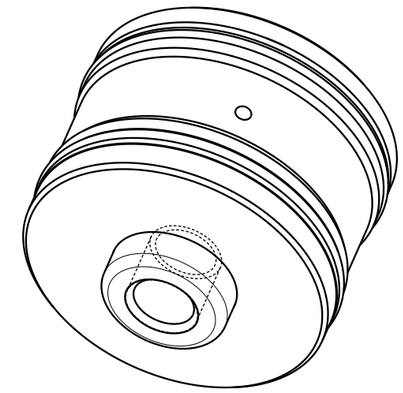

ILC21411600 REV A ECN 2802

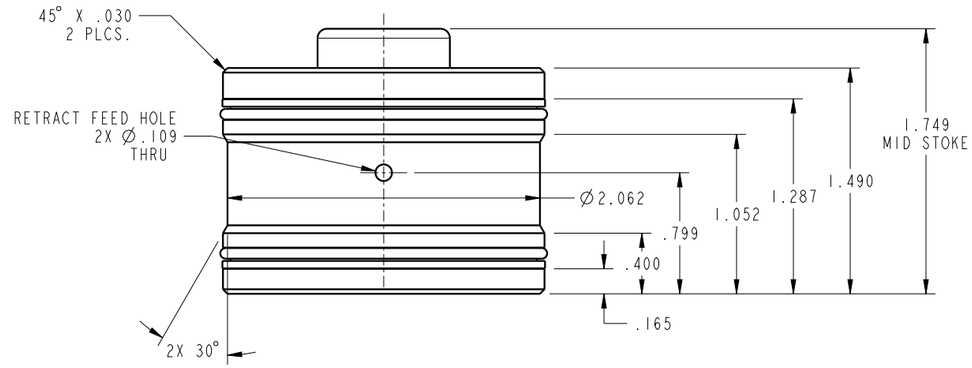

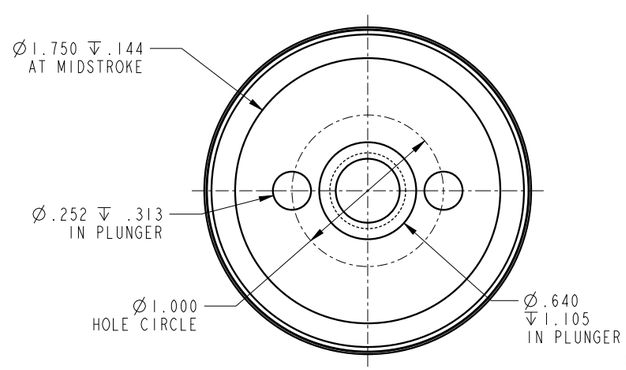

NOTE: RETURN SPRING INCLUDED WITH CYLINDER.
SPRING OMITTED FOR CLARITY

A	2802	RELEASE	DKC	3/3/15	21411600	A	CYL, CM, PULL, 9000LB
REV	IN ACCORDANCE WITH ECN	EFFECTIVE DATE	REVISED BY	DATE	REFERENCE MODEL	REF REV	1/2-13 THREAD
DRW BY: DKC	DRAWING STATUS: Released				TOLERENCES DO NOT APPLY	SIZE B	ILC21411600 REV A
DATE: 8/21/14	PRODUCTION APPROVED FOR RELEASED STATUS ONLY				DIMENSIONS ARE NOMINAL		

CAD CONTROL DRAWING

VEKTEK®
VEKTEK, INC.
1334 E. SIXTH AVE. P.O. BOX 625
EMPORIA, KS. 66801 U.S.A.

SHEET 1 OF 1

FORM FEG036, Rev. B

@Copyright 1986-2026 by Vektek LLC******* *****

****