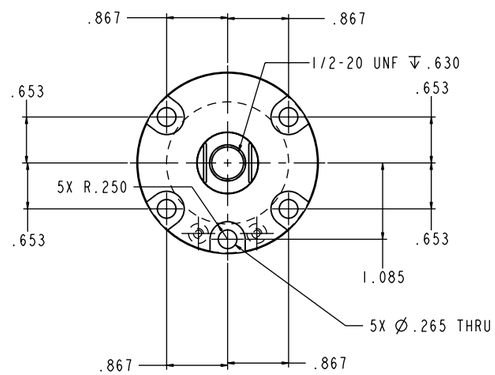

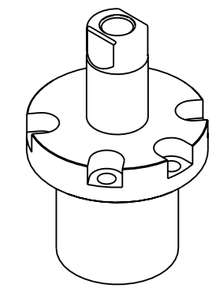

ILC21621302 REV A ECN 2438

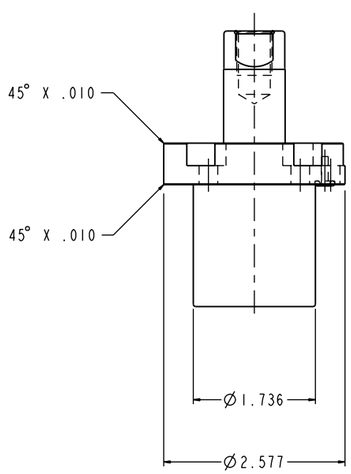

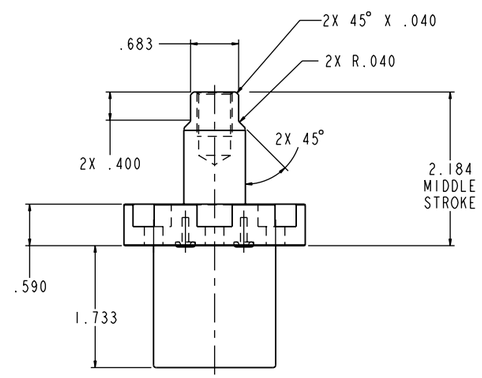

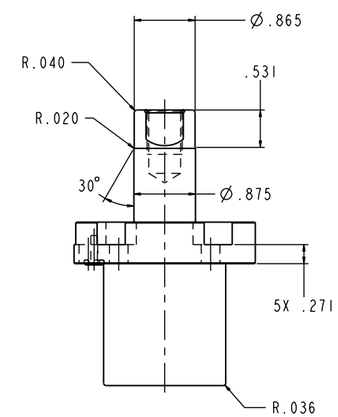

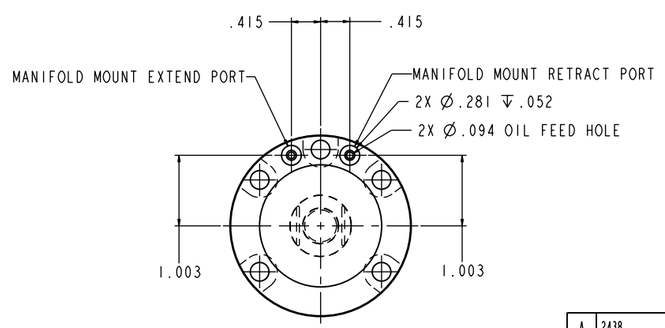

CAD CONTROL DRAWING

VEKTEK®
VEKTEK, INC.
1334 E. SIXTH AVE. P.O. BOX 625
EMPORIA, KS. 66801 U.S.A.

A	2438	RELEASE	JDW	10/04/12	21621302	B	CYL,TF,MM,6100,.59 STRK,DA
REV	IN ACCORDANCE WITH ECN	EFFECTIVE DATE	REVISED BY	DATE	REFERENCE MODEL	REF REV	

DRW BY: JDW
DATE: 10/04/12
DRAWING STATUS: **Released**
PRODUCTION APPROVED FOR RELEASED STATUS ONLY
TOLERANCES DO NOT APPLY
DIMENSIONS ARE NOMINAL
SIZE D | ILC21621302 | REV A
SHEET 1 OF 1
FORM FEG036, Rev. A

@Copyright 1986-2026 by Vektek LLC******* *****

****