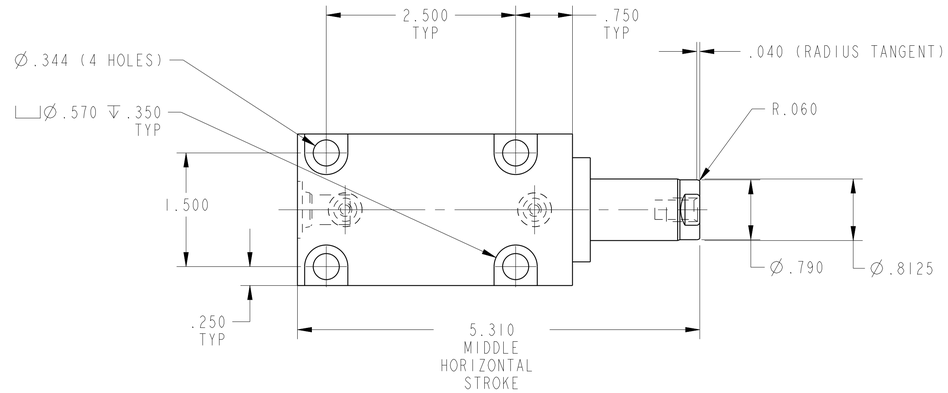

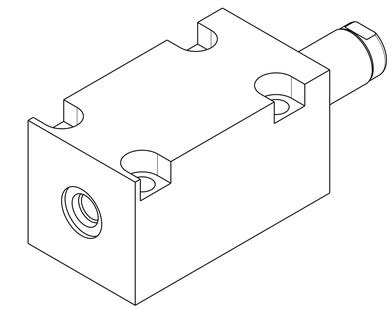

ILC25121022 REV A ECN 5974

SCALE 1.000

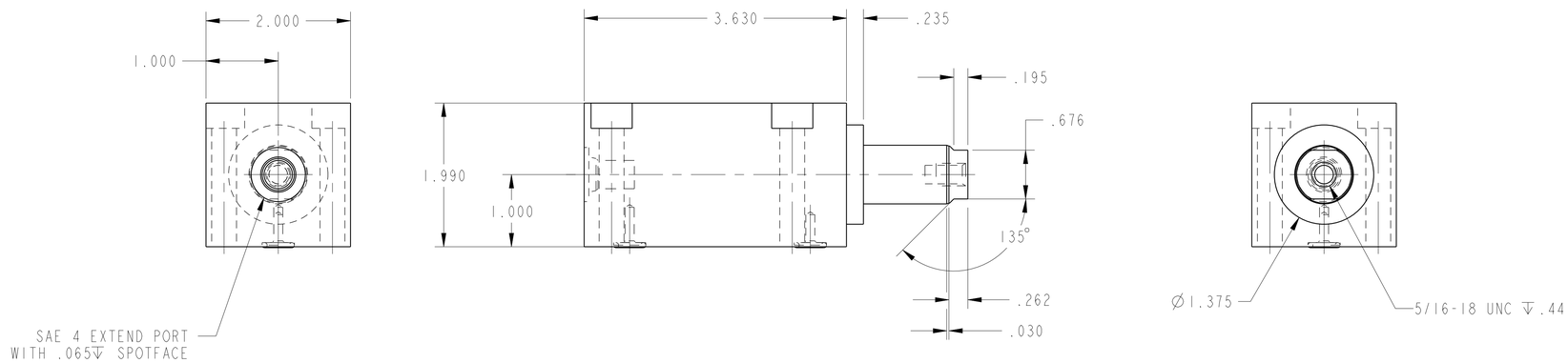

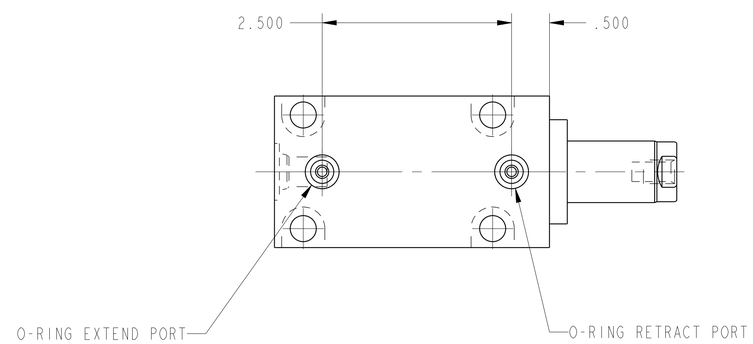

CAD CONTROL DRAWING

VEKTEK®

VEKTEK, INC.
1334 E. SIXTH AVE. P.O. BOX 625
EMPORIA, KS. 66801 U.S.A.

A	5974	RELEASE	NPETERS	5/20/26	25-1210-22	A	DAPC, MM, 3900, 2.0 STRK
REV	IN ACCORDANCE WITH ECN	EFFECTIVE DATE	REVISED BY	DATE	REFERENCE MODEL	REF REV	
DRW BY: NPETERS	DRAWING STATUS: Released				TOLERANCES DO NOT APPLY	SIZE	ILC25121022 REV A
DATE: 4/20/26	PRODUCTION APPROVED FOR RELEASED STATUS ONLY				DIMENSIONS ARE NOMINAL	D	

SHEET 1 OF 1

@Copyright 1986-2026 by Vektek LLC******* *****

FORM FEG036, Rev. B