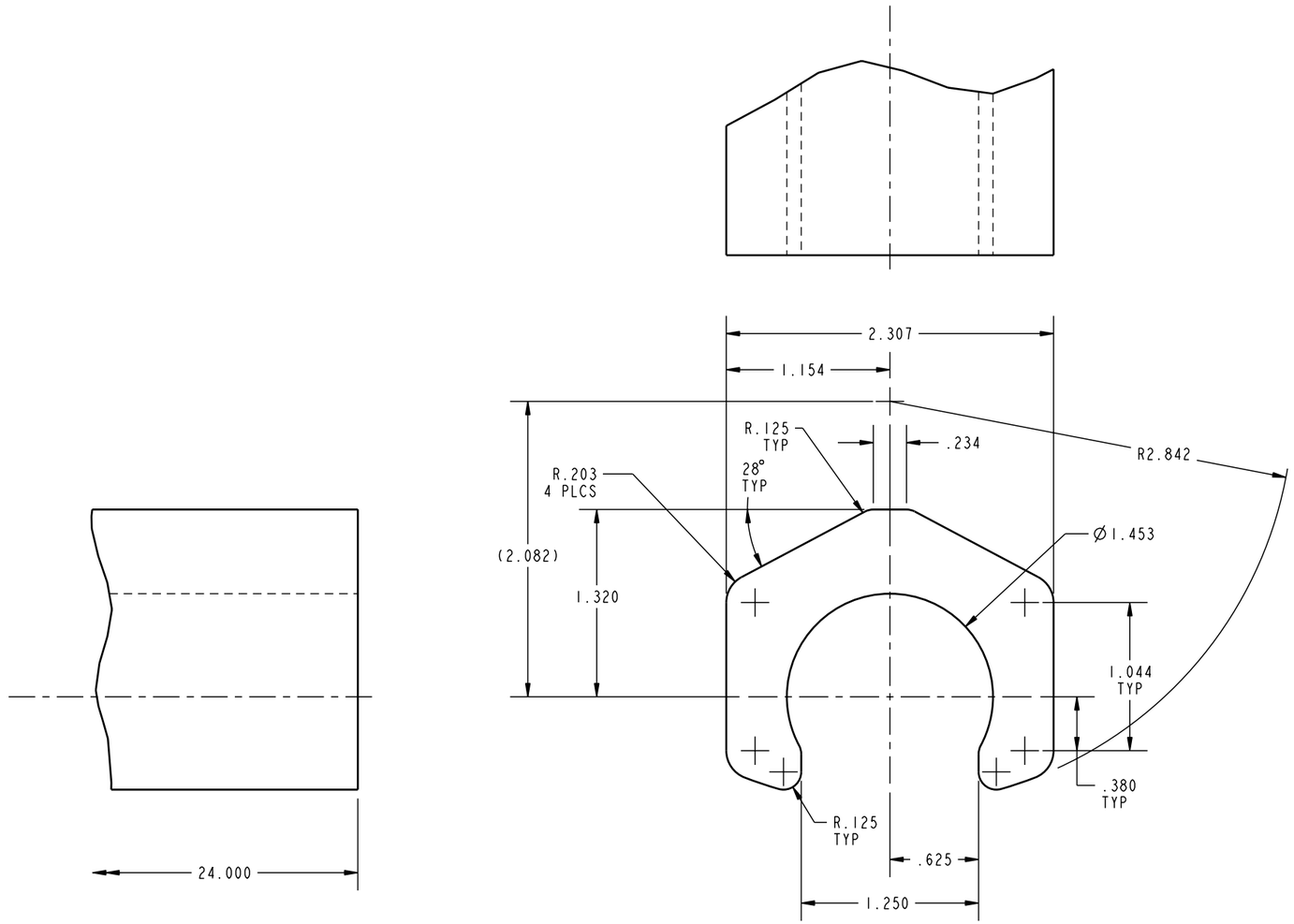

ILC64041401 REV A ECN1341

CAD CONTROL DRAWING

VEKTEK

VEKTEK, INC.
1334 E. SIXTH AVE. P.O. BOX 625
EMPORIA, KS. 66801 U.S.A.

A	1341	RELEASE	K. ROEMER	07-18-05	64041401	A	SPACER, SC, TF, 1100, 24 IN
REV	IN ACCORDANCE WITH ECN	EFFECTIVE DATE	REVISED BY	DATE	REFERENCE MODEL	REF REV	`` `` ``

DRW BY: K. ROEMER
DATE: 07-18-05

DRAWING STATUS: **Released**
PRODUCTION APPROVED FOR RELEASED STATUS ONLY

TOLERENCES DO NOT APPLY
DIMENSIONS ARE NOMINAL

SIZE B | ILC64041401 | REV A

SHEET 1 OF 1

FORM FEG036, Rev. A

@Copyright 1986-2026 by Vektek LLC******* *****

****