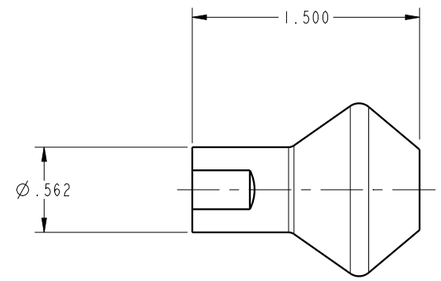

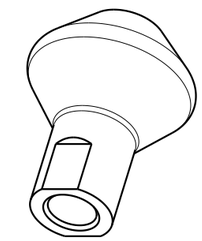

ILC66101801 REV B ECN 4413

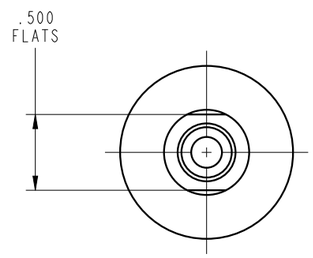

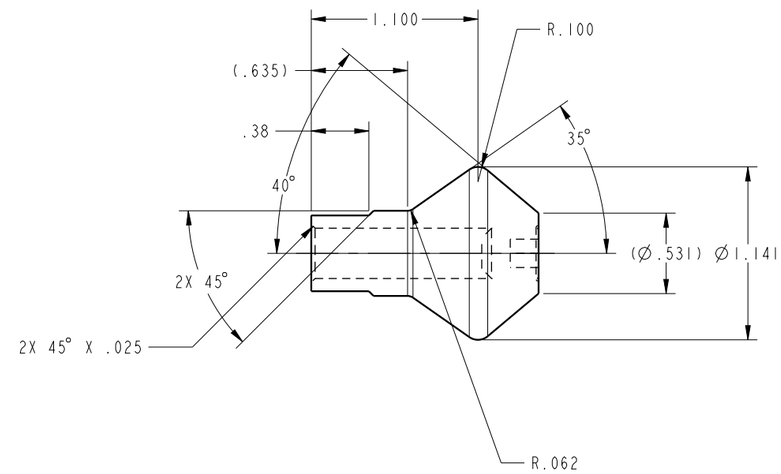

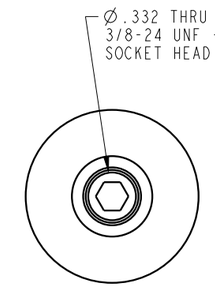

CAD CONTROL DRAWING

VEKTEK®
VEKTEK, INC.
1334 E. SIXTH AVE. P.O. BOX 625
EMPORIA, KS. 66801 U.S.A.

B	4413	RELEASE	RLK	4/28/21	66101801	B	ASSY,HEAD,CLUB,STD,18
REV	IN ACCORDANCE WITH ECN	EFFECTIVE DATE	REVISED BY	DATE	REFERENCE MODEL	REF REV	`` `` ``

DRW BY: K. ROEMER
DATE: 07/05/12
DRAWING STATUS: Released
PRODUCTION APPROVED FOR RELEASED STATUS ONLY
TOLERENCES DO NOT APPLY
DIMENSIONS ARE NOMINAL
SIZE B | ILC66101801 | REV B
SHEET 1 OF 1
FORM FEG036, Rev. B

© Copyright 1986-2021 by Vektek LLC
@Copyright 1986-2026 by Vektek LLC******* *****
****