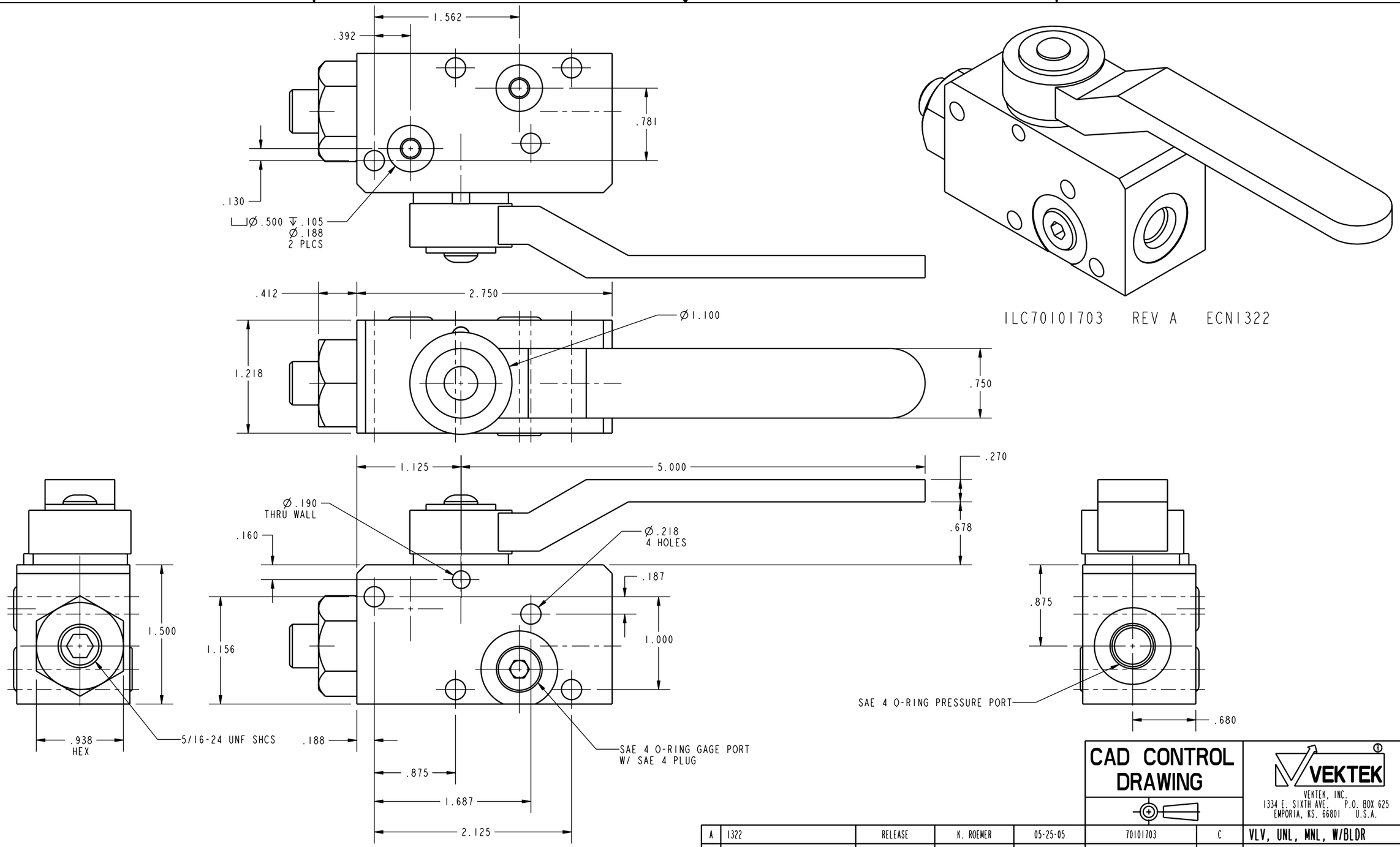

CAD CONTROL DRAWING

VEKTEK®
VEKTEK, INC.
1334 E. SIXTH AVE. P.O. BOX 625
EMPORIA, KS. 66801 U.S.A.

A	1322	RELEASE	K. ROEMER	05-25-05	70101703	C	VLV, UNL, MNL, W/BLDR
REV	IN ACCORDANCE WITH ECN	EFFECTIVE DATE	REVISED BY	DATE	REFERENCE MODEL	REF REV	

DRW BY: K. ROEMER
DATE: 05-25-05
DRAWING STATUS: **Released**
PRODUCTION APPROVED FOR RELEASED STATUS ONLY

TOLERENCES DO NOT APPLY
DIMENSIONS ARE NOMINAL

SIZE B | ILC70101703 | REV A

SHEET 1 OF 1

FORM FEG036, Rev. A

@Copyright 1986-2026 by Vektek LLC******* *****

****