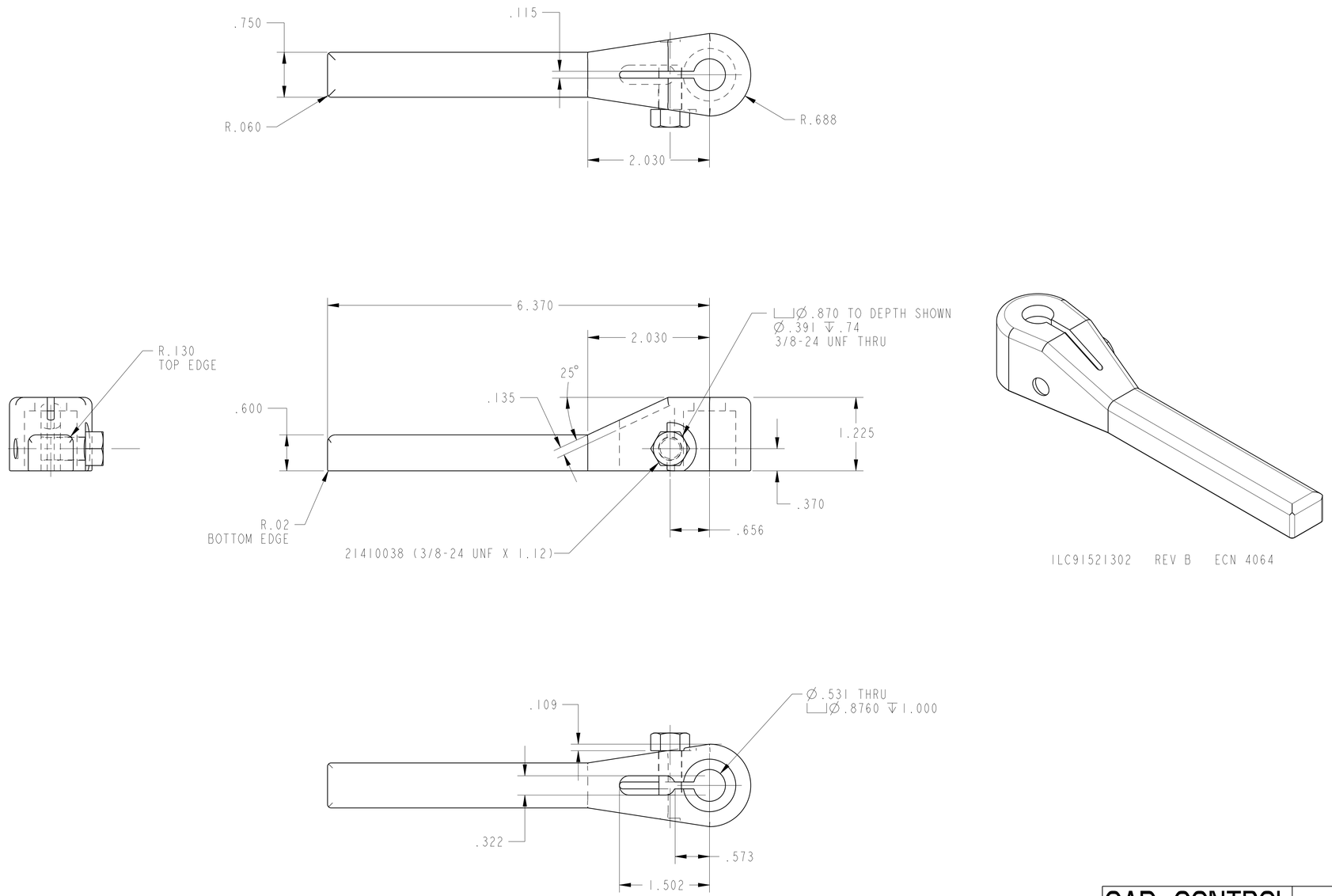

CAD CONTROL DRAWING

VEKTEK®

VEKTEK, INC.
1334 E. SIXTH AVE. P.O. BOX 625
EMPORIA, KS. 66801 U.S.A.

B	4064	RELEASE	NPETERS	2/3/20	91521302	M	ARM,SC,EXT,2600
REV	IN ACCORDANCE WITH ECN	EFFECTIVE DATE	REVISED BY	DATE	REFERENCE MODEL	REF REV	

DRW BY: K. ROEMER
DATE: 07-23-02

DRAWING STATUS: **Released**
PRODUCTION APPROVED FOR RELEASED STATUS ONLY

TOLERANCES DO NOT APPLY
DIMENSIONS ARE NOMINAL

SIZE D | ILC91521302 | REV B

SHEET 1 OF 1

FORM FEG036, Rev. B

@Copyright 1986-2026 by Vektek LLC******* *****