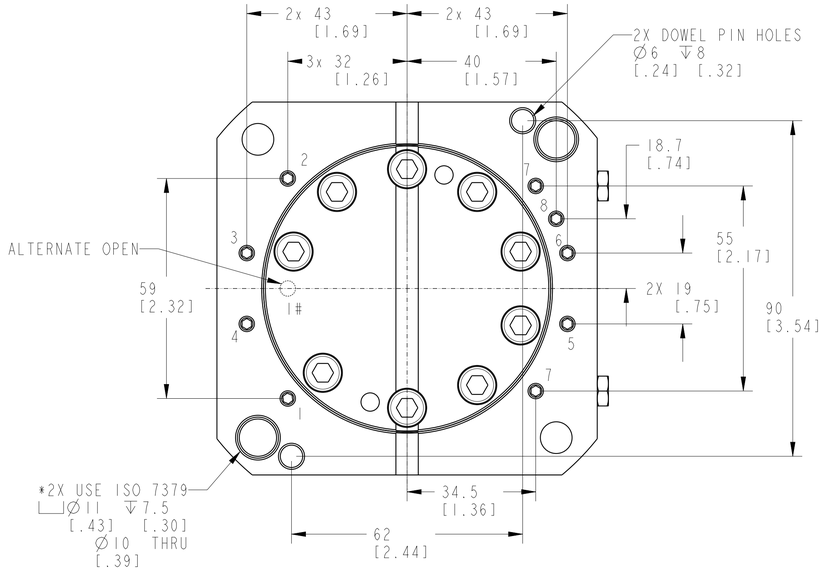

MANIFOLD HOLES
1:UNCLAMP (#ALTERNATE LOCATION ON REQUEST)
2:CLAMP
3:***JAW 1 AIR SUPPLY
4:**PNEUMATIC UNCLAMP MONITORING
5:***JAW 2 AIR SUPPLY
6:**PNEUMATIC CLAMP MONITORING
7:LUBRICATION
8:AIR PURGE

**REQUIRES MB OPTION
***REQUIRES PC OPTION

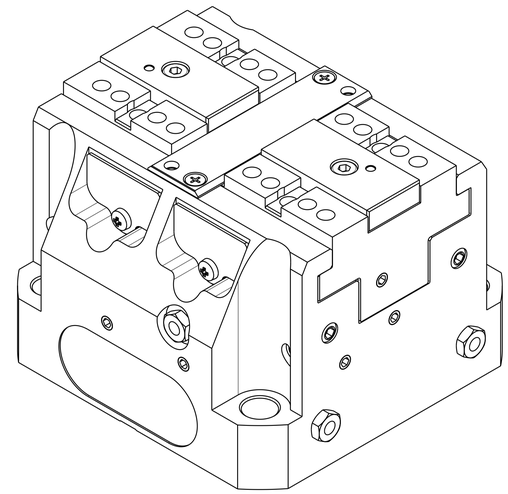

1LCM-VCV-100-C1-1D REV B ECN5815

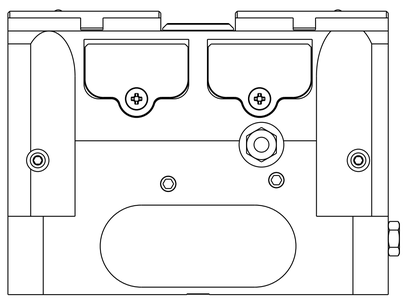

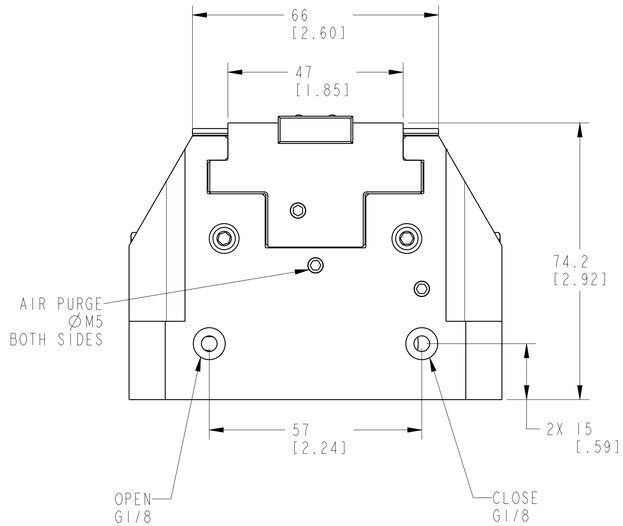

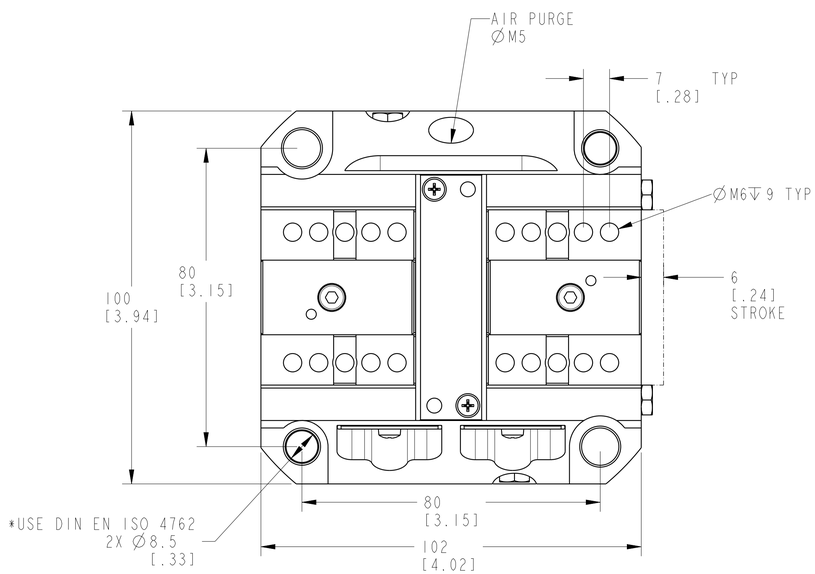

*IF USING 4X DIN EN ISO 4762 BOLTS,
2X DIN EN ISO 13337 SPRING PINS CAN BE USED.
OTHERWISE USE 2X BOLTS AND 2X ISO 7379 SHOULDER BOLTS.
*ACCURACY TO CLAMPING CENTER FOR MOUNTING OPTIONS:
*SPRING PINS: +/-0.04
*SHOULDER BOLTS: +/-0.02

CAD CONTROL DRAWING

VEKTEK®
VEKTEK, INC.
1334 E. SIXTH AVE. P.O. BOX 625
EMPORIA, KS. 66801 U.S.A.

B	5815	RELEASE	AJT	10/8/25	VCV-100-C1-1D	A	VISE,CENTER,250BAR,100
REV	IN ACCORDANCE WITH ECN	EFFECTIVE DATE	REVISED BY	DATE	REFERENCE MODEL	REF REV	
DRW BY: AJT	DRAWING STATUS: Released				TOLERANCES DO NOT APPLY	UNITS	SIZE
DATE: 12/11/24	PRODUCTION APPROVED FOR RELEASED STATUS ONLY				DIMENSIONS ARE NOMINAL	mm [inch]	D

1LCM-VCV-100-C1-1D REV B

SHEET 1 OF 1

@Copyright 1986-2026 by Vektek LLC******* *****

FORM FEG036, Rev. C