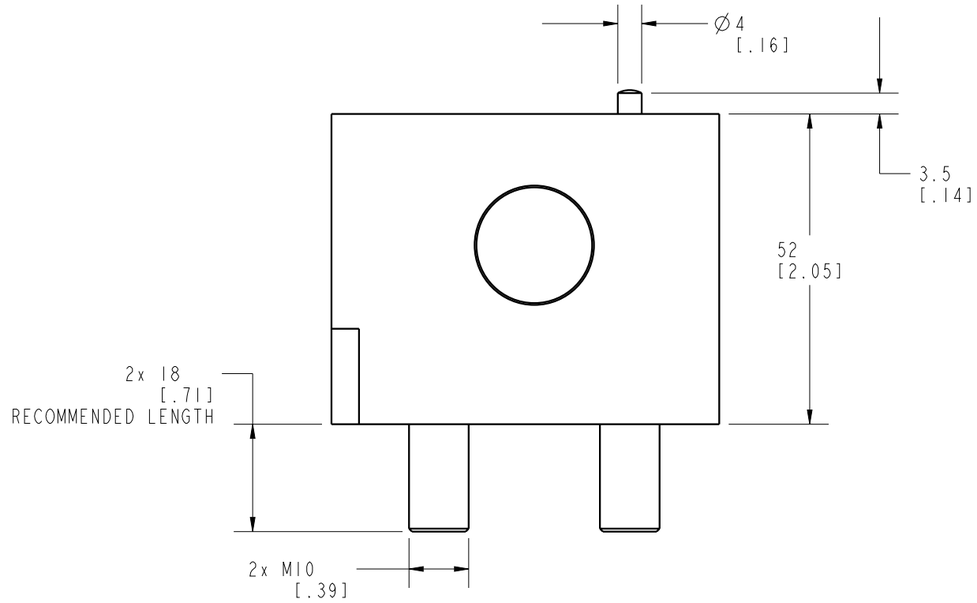

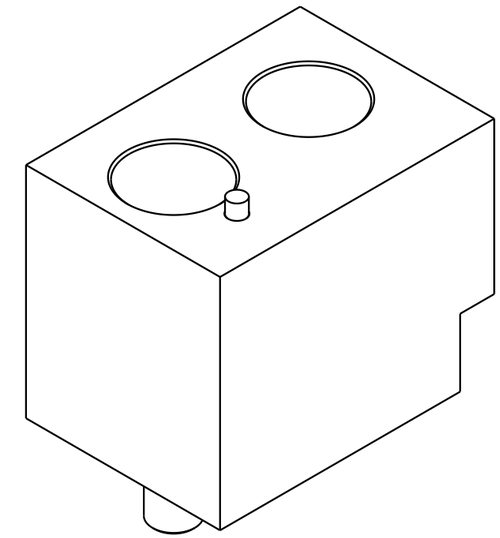

ILCM-VY-B-160 REV A ECN 5736

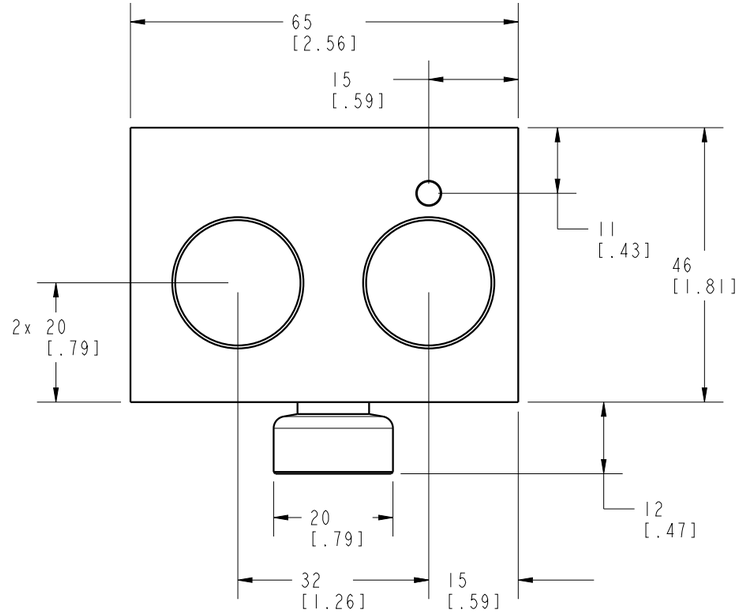

A	5736	RELEASE	AJT	6/5/25	VY-B-160	A	GRIPPER,JAW,QC,160,BASE
REV	IN ACCORDANCE WITH ECN	EFFECTIVE DATE	REVISED BY	DATE	REFERENCE MODEL	REF REV	
DRW BY: AJT	DRAWING STATUS: Released				TOLERENCES DO NOT APPLY	UNITS	SIZE B — ILCM-VY-B-160 — REV A
DATE: 7/3/24	PRODUCTION APPROVED FOR RELEASED STATUS ONLY				DIMENSIONS ARE NOMINAL	mm [inch]	

CAD CONTROL DRAWING

VEKTEK®
VEKTEK, INC.
1334 E. SIXTH AVE. P.O. BOX 625
EMPORIA, KS. 66801 U.S.A.

SHEET 1 OF 1

FORM FEG036, Rev. C

@Copyright 1986-2026 by Vektek LLC******* ***** **********