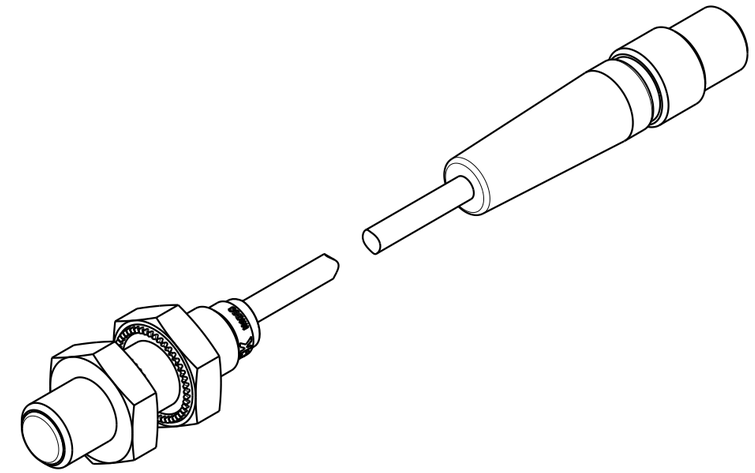

ILCM29700210 REV A ECN5899

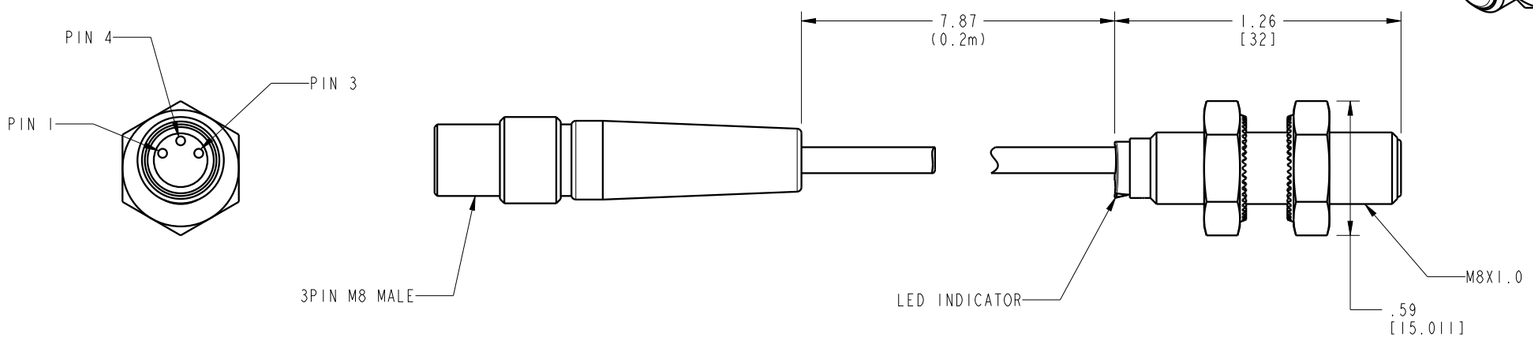

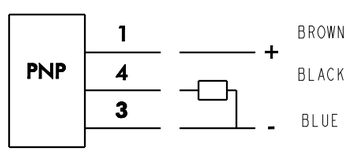

NOTES:
1. FLUSH MOUNT, IP68/IP69K, IO LINK
2. 2.0MM SENSING RANGE
3. 10VDC TO 30VDC
4. UP TO 200mA CONTINUOUS CURRENT
5. 4k Hz SWITCHING FREQUENCY
6. STAINLESS STEEL MATERIAL

CAD CONTROL DRAWING

VEKTEK®
VEKTEK, INC.
1334 E. SIXTH AVE. P.O. BOX 625
EMPORIA, KS. 66801 U.S.A.

A	5899	RELEASE	AJT	2/2/26	29700210	A	CAD,SENSOR,INDUCT,M8,PNP,2.0MM,3PIN M8,0.2M
REV	IN ACCORDANCE WITH ECN	EFFECTIVE DATE	REVISED BY	DATE	REFERENCE MODEL	REF REV	```
DRW BY: AJT	DRAWING STATUS: Released			TOLERENCES DO NOT APPLY	UNITS	SIZE	REV
DATE: 2/2/26	PRODUCTION APPROVED FOR RELEASED STATUS ONLY			DIMENSIONS ARE NOMINAL	mm [inch]	B	ILCM29700210 A

SHEET 1 OF 1

FORM FEG036, Rev. C

@Copyright 1986-2026 by Vektek LLC******* *****

****