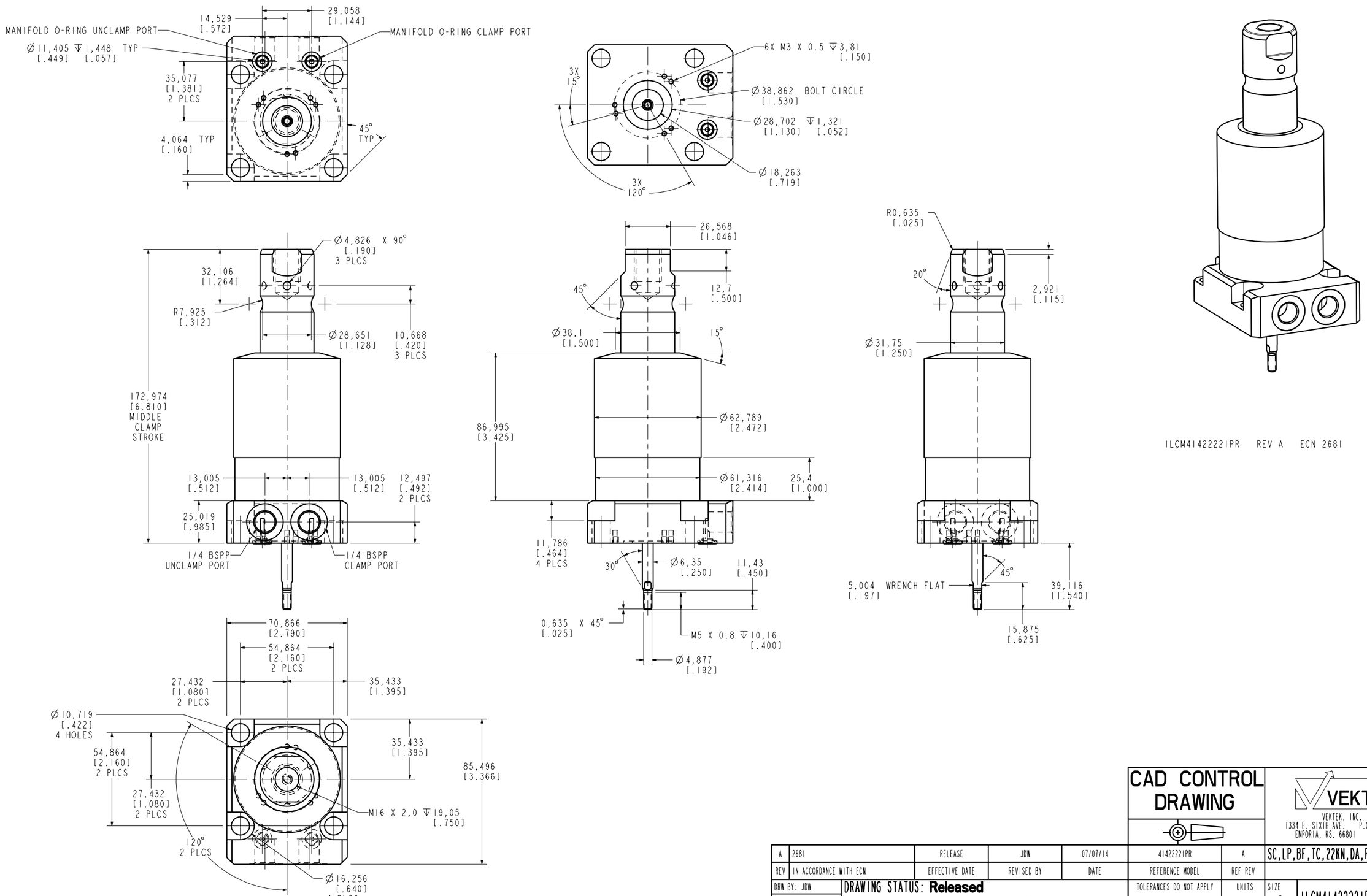

CAD CONTROL DRAWING

VEKTEK

VEKTEK, INC.
1334 E. SIXTH AVE. P.O. BOX 625
EMPORIA, KS. 66801 U.S.A.

A	2681	RELEASE	JDW	07/07/14	41422221PR	A	SC,LP,BF,TC,22KN,DA,RH,PR
REV	IN ACCORDANCE WITH ECN	EFFECTIVE DATE	REVISED BY	DATE	REFERENCE MODEL	REF REV	

DRW BY: JDW	DRAWING STATUS: **Released**	TOLERANCES DO NOT APPLY	UNITS	SIZE		REV
DATE: 07/07/14	PRODUCTION APPROVED FOR RELEASED STATUS ONLY	DIMENSIONS ARE NOMINAL	mm [inch]	D	ILCM41422221PR	A

SHEET 1 OF 1

FORM FEG036, Rev. C

@Copyright 1986-2026 by Vektek LLC******* ***** ************