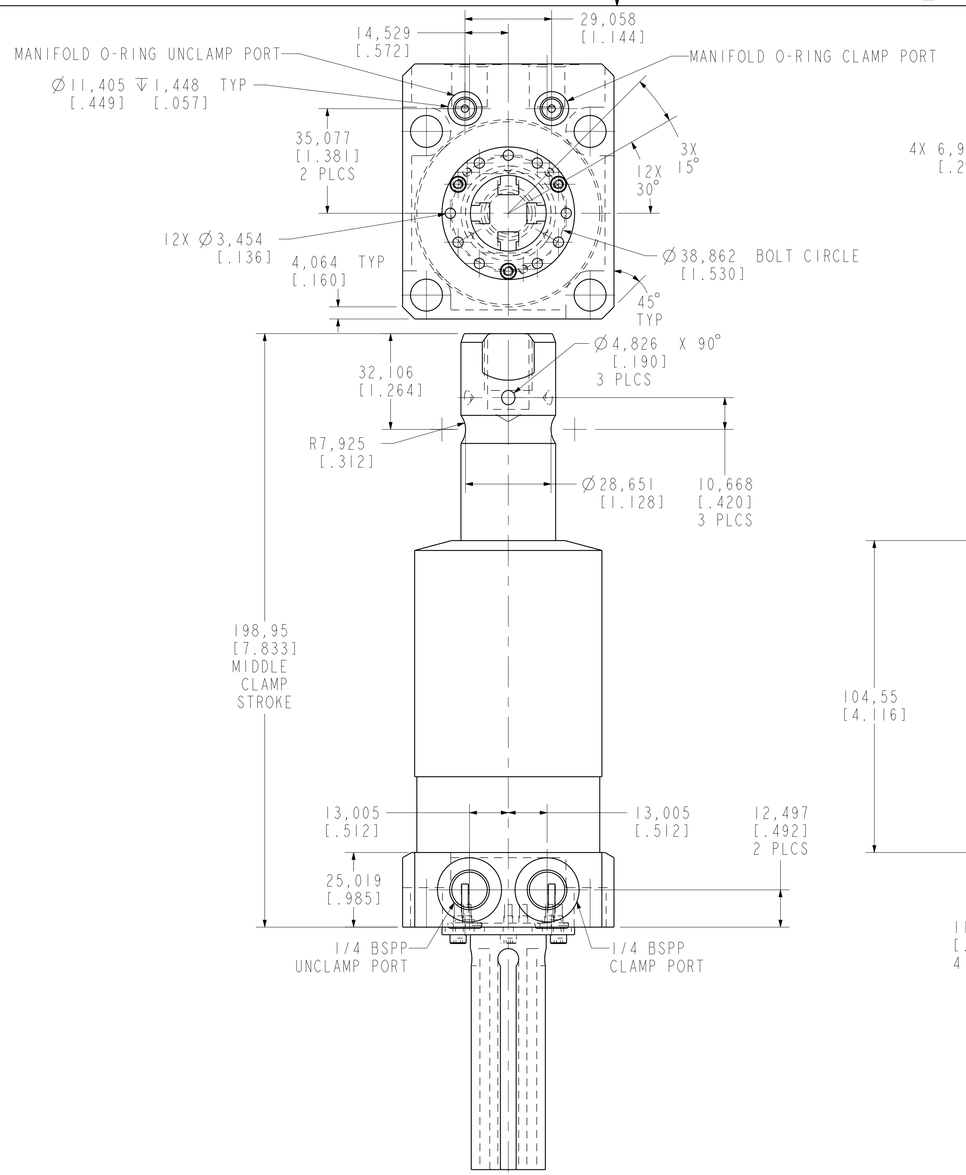


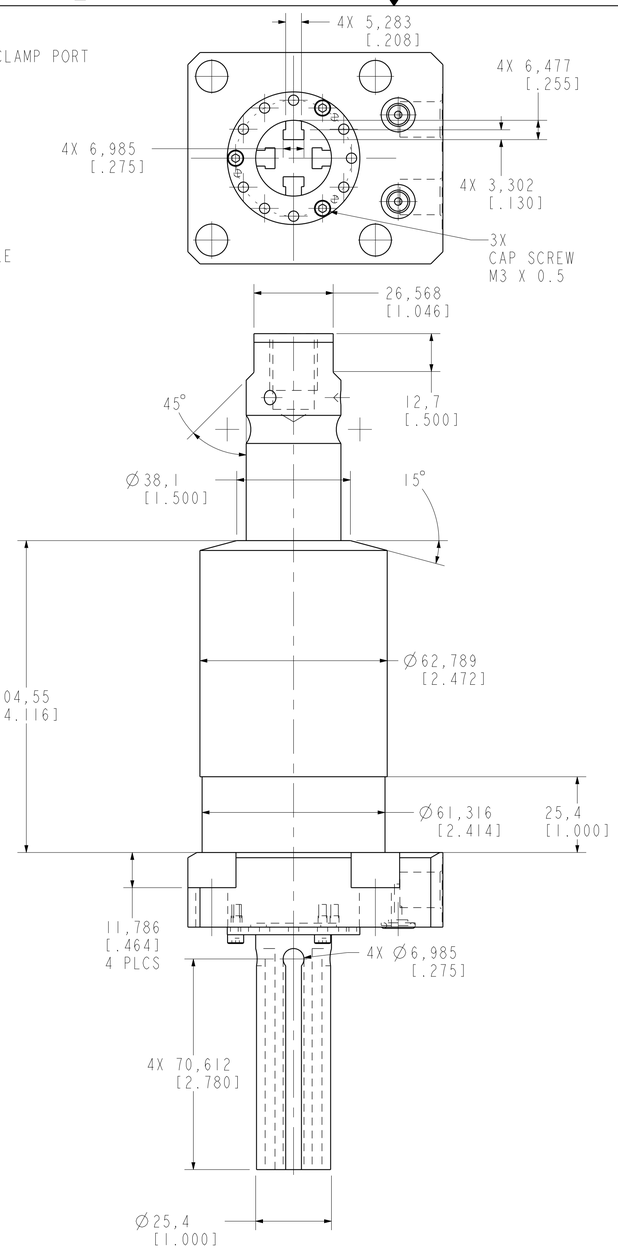


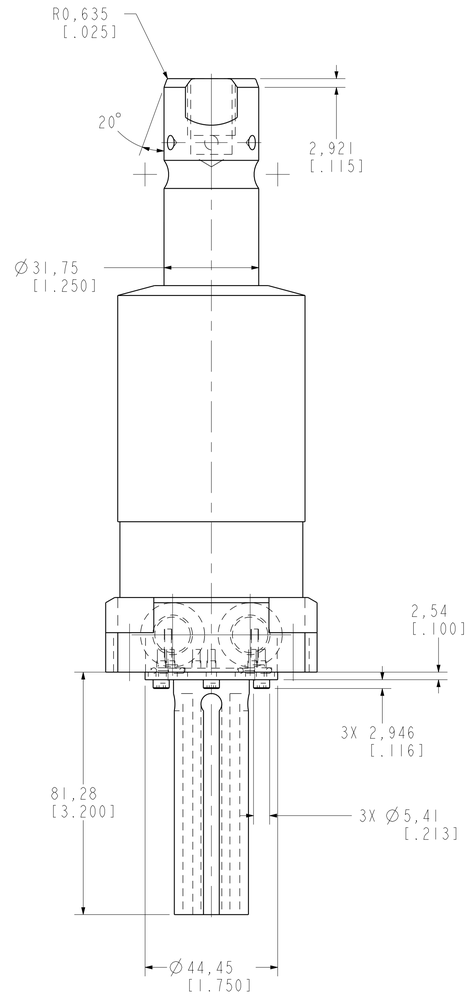


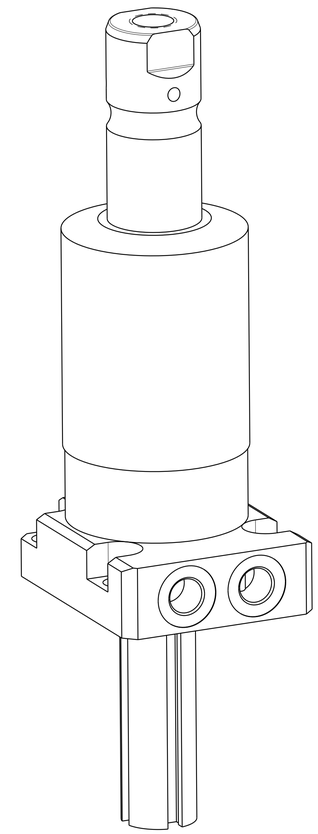

ILCM41422227PS REV B ECN 4191

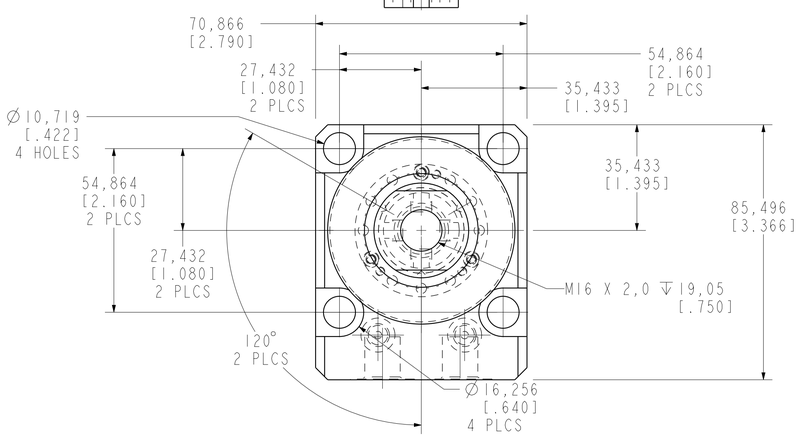


# CAD CONTROL DRAWING

VEKTEK®

VEKTEK, INC.
1334 E. SIXTH AVE. P.O. BOX 625
EMPORIA, KS. 66801 U.S.A.

| | | | | | | | |
|---|---|---|---|---|---|---|---|
| B | 4191 | RELEASE | JDW | 05/22/20 | 41422227PS | A | SC,LP,BF,TC,22KN,DA,LH,PS,LS |
| REV | IN ACCORDANCE WITH ECN | EFFECTIVE DATE | REVISED BY | DATE | REFERENCE MODEL | REF REV | |

DRW BY: JDW
DATE: 03/27/19

DRAWING STATUS: **Released**
PRODUCTION APPROVED FOR RELEASED STATUS ONLY

TOLERANCES DO NOT APPLY
DIMENSIONS ARE NOMINAL

SIZE D | ILCM41422227PS | REV B

SHEET 1 OF 1

@Copyright 1986-2026 by Vektek LLC******** ******

FORM FEG036, Rev. B