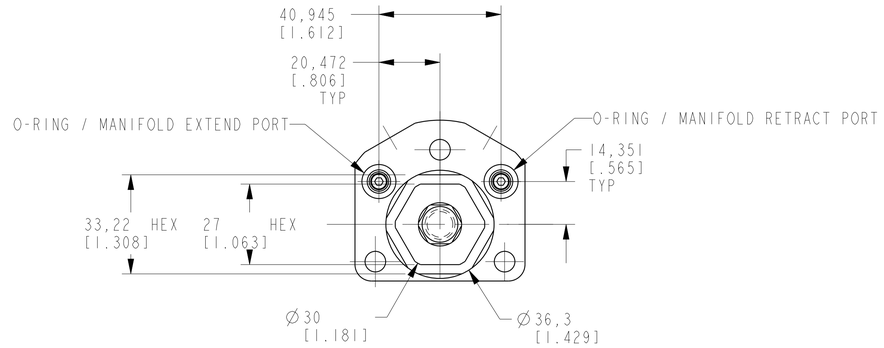

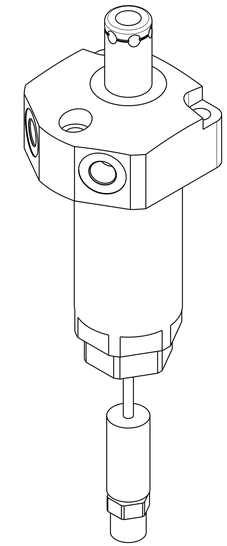

ILCM41460522US REV A ECN 5678

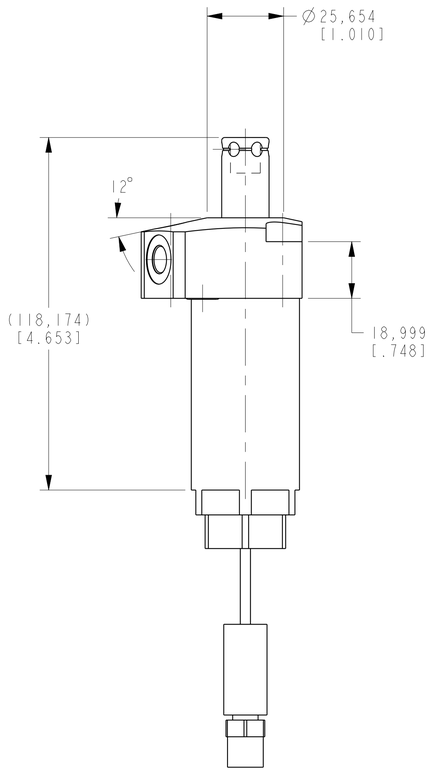

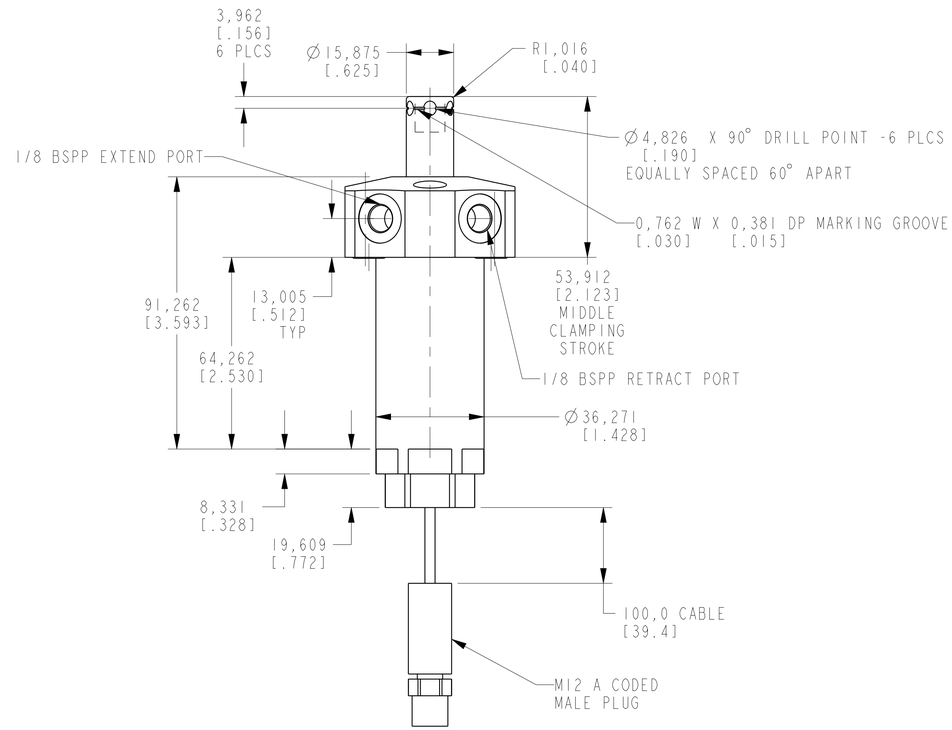

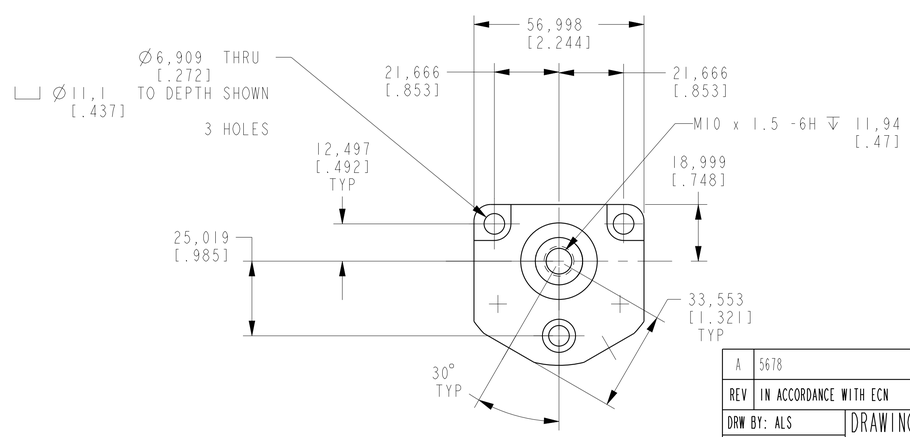

CAD CONTROL DRAWING

VEKTEK

VEKTEK, INC.
1334 E. SIXTH AVE. P.O. BOX 625
EMPORIA, KS. 66801 U.S.A.

A	5678	RELEASE	ALS	4/7/25	41460522US	A	SC, TF, TC, 4.9 KN, DA, LH, US
REV	IN ACCORDANCE WITH ECN	EFFECTIVE DATE	REVISED BY	DATE	REFERENCE MODEL	REF REV	

DRW BY: ALS
DATE: 4/9/25

DRAWING STATUS: **Released**
PRODUCTION APPROVED FOR RELEASED STATUS ONLY

TOLERANCES DO NOT APPLY
DIMENSIONS ARE NOMINAL

UNITS: mm [inch]

SIZE: D | ILCM41460522US | REV: A

SHEET 1 OF 1

@Copyright 1986-2026 by Vektek LLC******* *****

FORM FEG036, Rev. C