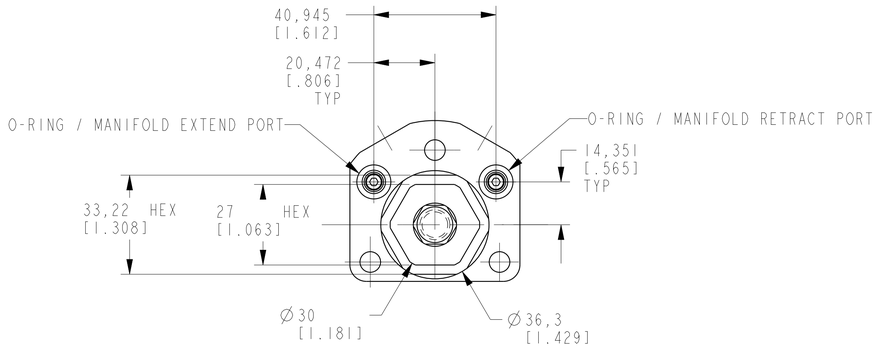

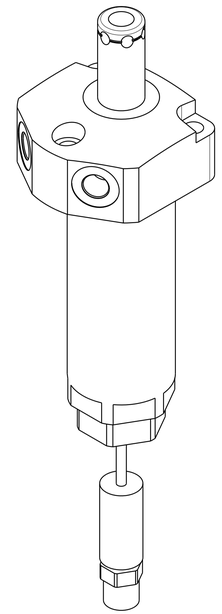

ILCM41460523US REV A ECN 5678

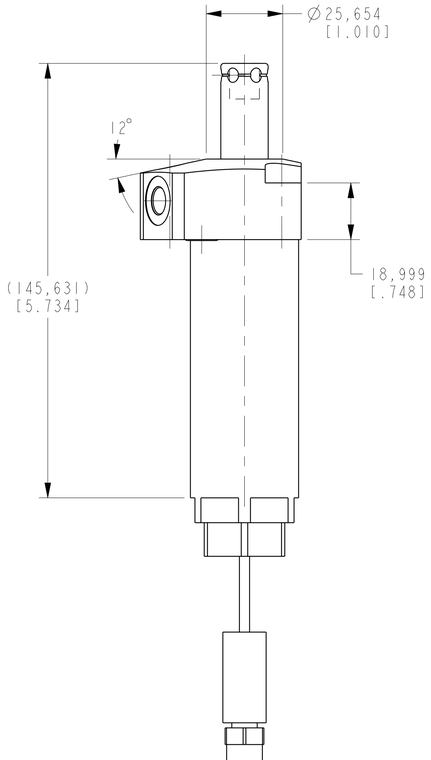

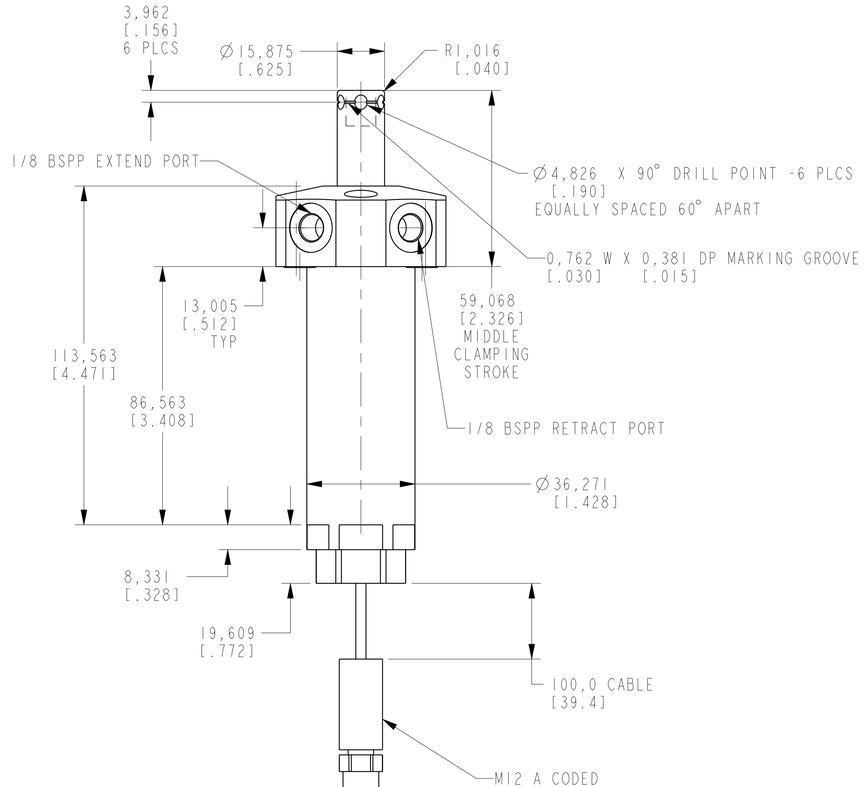

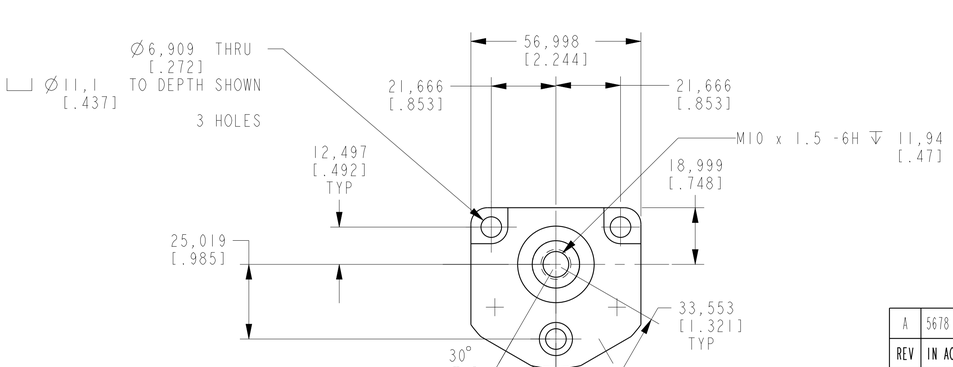

CAD CONTROL DRAWING

VEKTEK

VEKTEK, INC.
1334 E. SIXTH AVE. P.O. BOX 625
EMPORIA, KS. 66801 U.S.A.

A	5678	RELEASE	ALS	4/7/25	41460523US	A	SC, TF, TC, 4.9 KN, DA, RH, LS, US
REV	IN ACCORDANCE WITH ECN	EFFECTIVE DATE	REVISED BY	DATE	REFERENCE MODEL	REF REV	
DRW BY: ALS	DRAWING STATUS: Released				TOLERANCES DO NOT APPLY	UNITS	SIZE
DATE: 4/9/25	PRODUCTION APPROVED FOR RELEASED STATUS ONLY				DIMENSIONS ARE NOMINAL	mm [inch]	D

ILCM41460523US REV A

SHEET 1 OF 1

@Copyright 1986-2026 by Vektek LLC******** ******

FORM FEG036, Rev. C