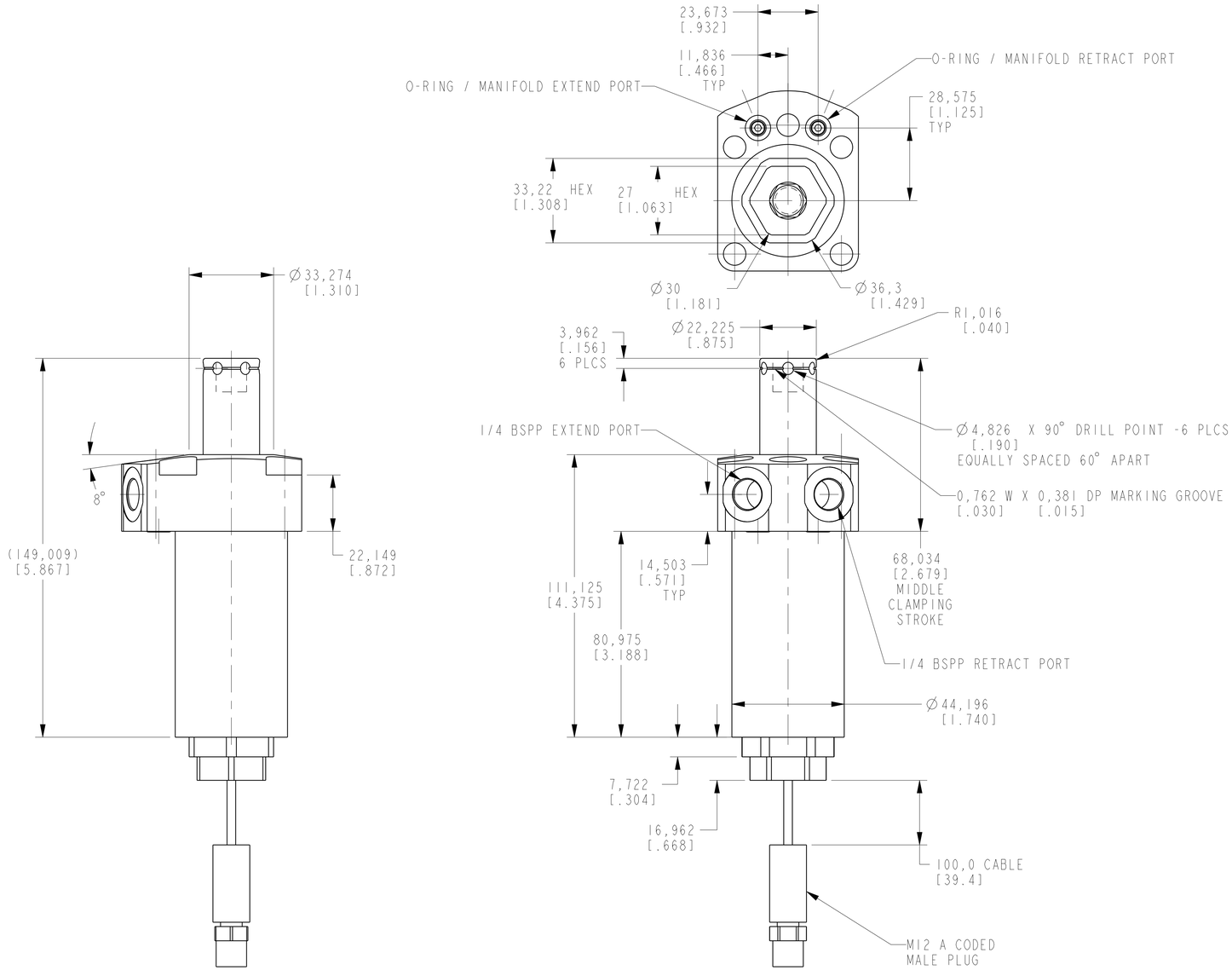

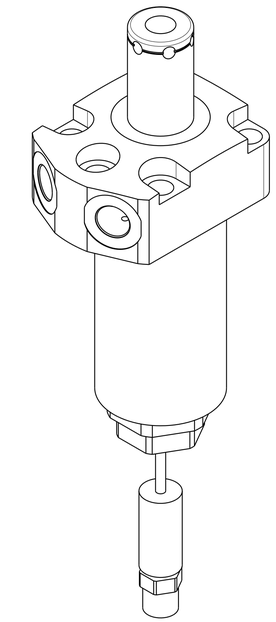

ILCM41461122US REV A ECN 5678

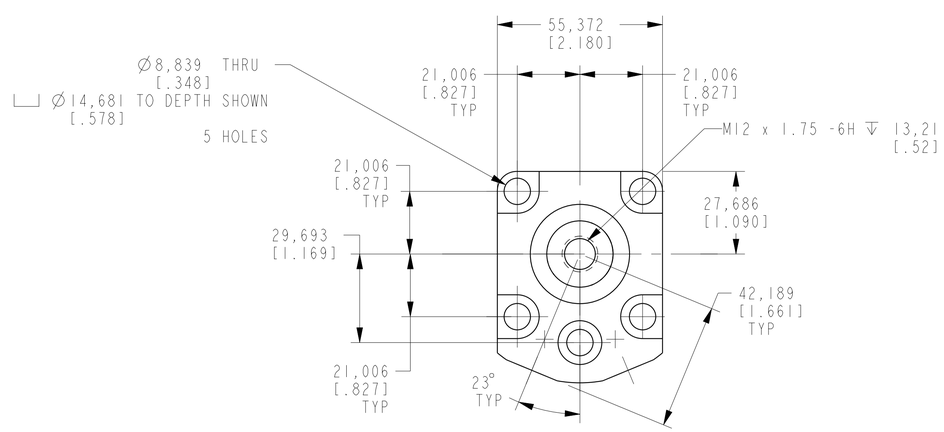

CAD CONTROL DRAWING

VEKTEK®

VEKTEK, INC.
1334 E. SIXTH AVE. P.O. BOX 625
EMPORIA, KS. 66801 U.S.A.

A	5678	RELEASE	ALS	4/7/25	41461122US	A	SC, TF, TC, 11.6 KN, DA, LH, US
REV	IN ACCORDANCE WITH ECN	EFFECTIVE DATE	REVISED BY	DATE	REFERENCE MODEL	REF REV	

DRW BY: ALS	DRAWING STATUS: Released	TOLERANCES DO NOT APPLY	UNITS	SIZE		REV
DATE: 4/9/25	PRODUCTION APPROVED FOR RELEASED STATUS ONLY	DIMENSIONS ARE NOMINAL	mm [inch]	D	ILCM41461122US	A

SHEET 1 OF 1

FORM FEG036, Rev. C

@Copyright 1986-2026 by Vektek LLC******* *****