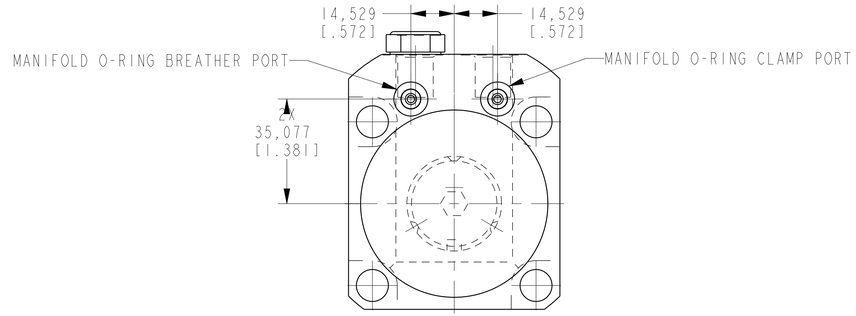

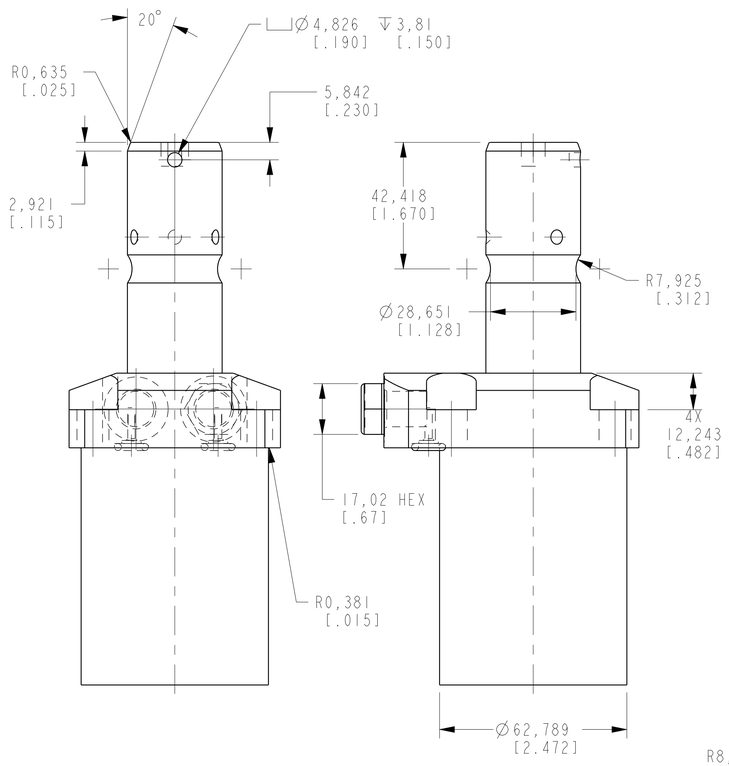

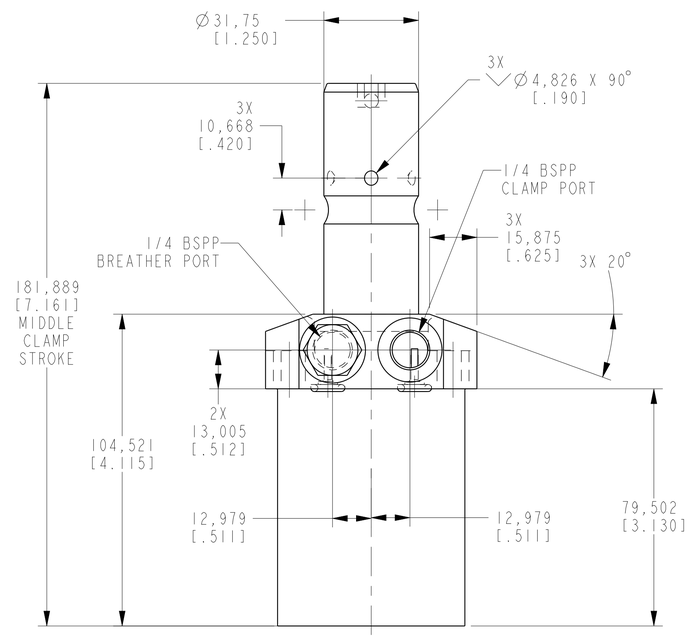

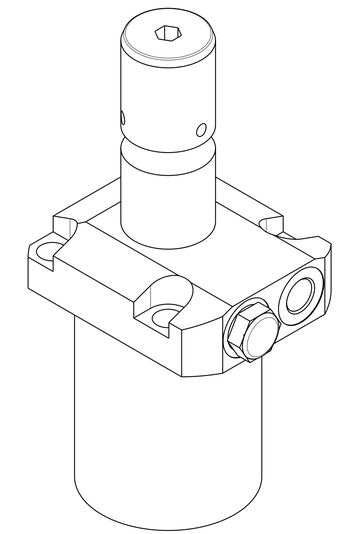

ILCM41462215 REV B ECN 3600

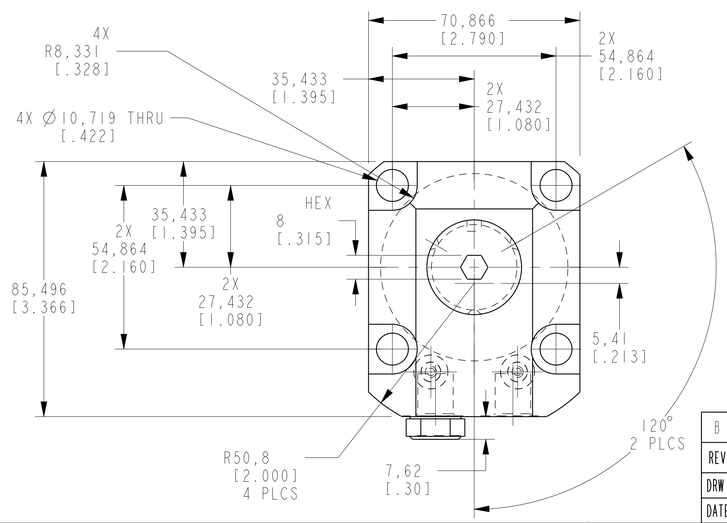

B	3600	RELEASE	NPETERS	10/9/18	41462215	A	SC,LP,TF,TC,22 KN,SA,STR
REV	IN ACCORDANCE WITH ECN	EFFECTIVE DATE	REVISED BY	DATE	REFERENCE MODEL	REF REV	
DRW BY: JDW	DRAWING STATUS: **Released**				TOLERANCES DO NOT APPLY	UNITS	SIZE D — ILCM41462215 — REV B
DATE: 7-15-11	PRODUCTION APPROVED FOR RELEASED STATUS ONLY				DIMENSIONS ARE NOMINAL	mm [inch]	

CAD CONTROL DRAWING

VEKTEK®

VEKTEK, INC.
1334 E. SIXTH AVE. P.O. BOX 625
EMPORIA, KS. 66801 U.S.A.

SHEET 1 OF 1

@Copyright 1986-2026 by Vektek LLC******* *****

FORM FEG036, Rev. C