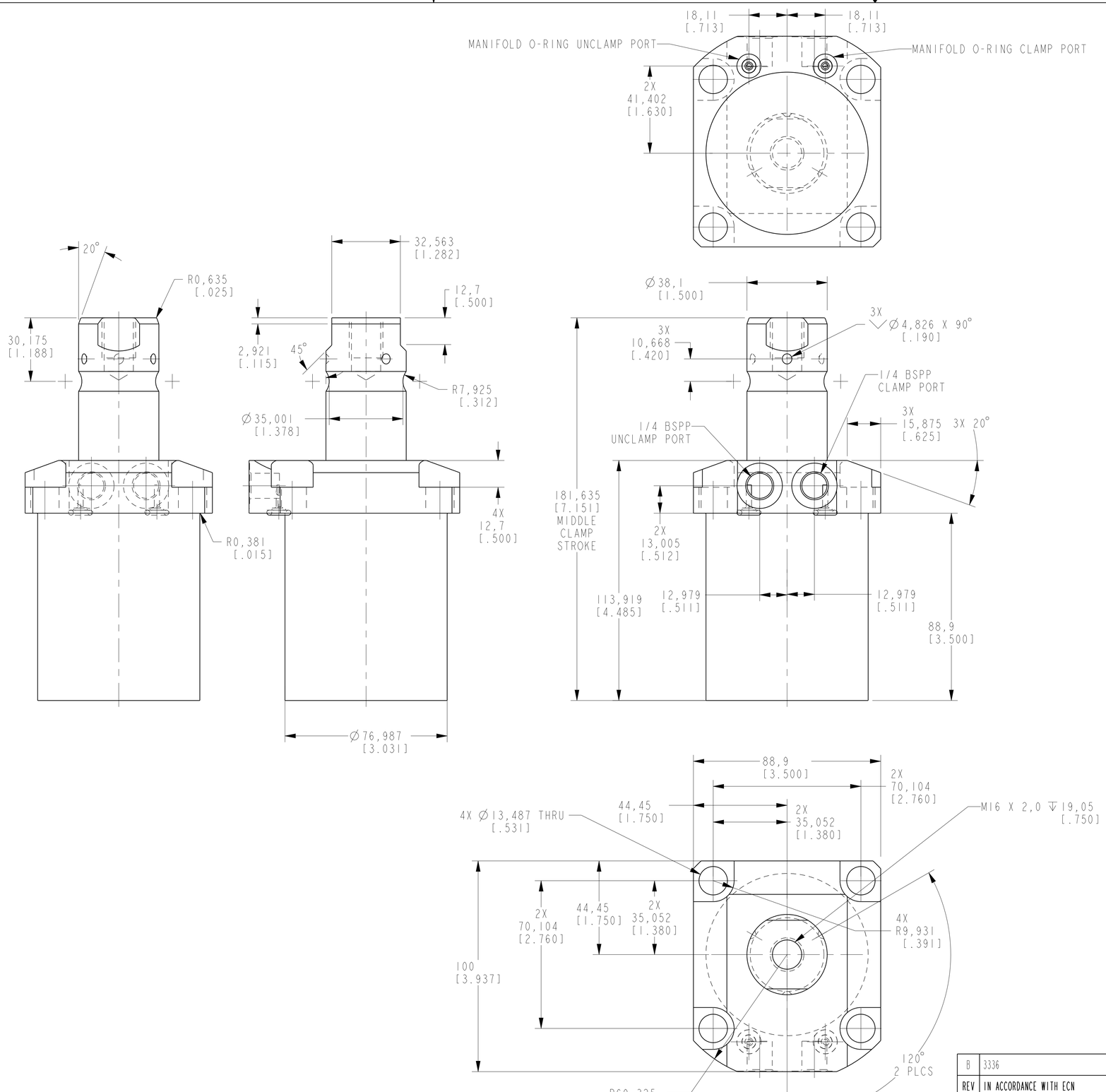

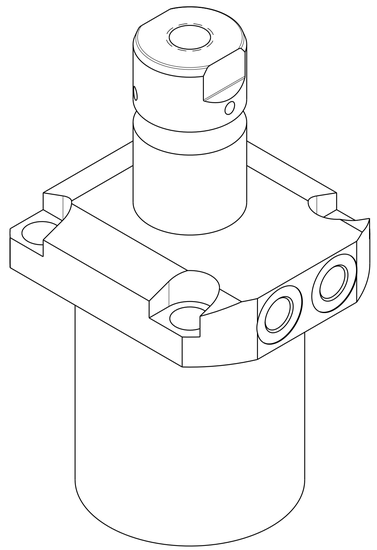

ILCM41463325 REV B ECN 3336

CAD CONTROL DRAWING

VEKTEK

VEKTEK, INC.
1334 E. SIXTH AVE. P.O. BOX 625
EMPORIA, KS. 66801 U.S.A.

B	3336	RELEASE	GAR	11/17/17	41463325	B	SC,LP,TF,TC,33 KN,DA,STR
REV	IN ACCORDANCE WITH ECN	EFFECTIVE DATE	REVISED BY	DATE	REFERENCE MODEL	REF REV	
DRW BY: JDW	DRAWING STATUS: **Released**				TOLERANCES DO NOT APPLY	UNITS	SIZE
DATE: 7-15-11	PRODUCTION APPROVED FOR RELEASED STATUS ONLY				DIMENSIONS ARE NOMINAL	mm [inch]	D

ILCM41463325 REV B

SHEET 1 OF 1

@Copyright 1986-2026 by Vektek LLC******** ******

FORM FEG036, Rev. C